INTRA-AUTOMATION

MESS- UND REGELINSTRUMENTE / MEASUREMENT AND CONTROL

TÜVRheinland® CERT ISO 9001

ITABAR®-FLOW-SENSORS

Working acc. to the Differential Pressure Principle
For Liquids, Gases and Steam

Itabar® type IBR
for gases and liquids

Itabar® type IBF-100
for flue gas applications

Itabar® type FTM
Installation and removal
under pressure

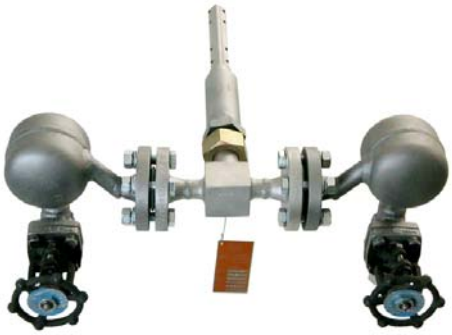

Itabar® type IBRD
for steam applications

Technical Catalogue

04/2010

FLOW

THE EXPERT IN LEVEL AND FLOW

ITABAR®-FLOW-SENSORS

Working acc. to the Differential Pressure Principle For Liquids, Gases and Steam

List of contents:

Chapt.		Title	Page
A		**General Information**	6
A.1		**Introduction to Pitot Tube Flow Measurement**	6
A.2		**Measurement Principle of Itabar-Flow-Sensors**	7
A.3		**Required Fluid Conditions**	9
A.4		**Advantages of Itabar-Flow-Sensors**	10
	A.4.1	Advantages in Comparison to Orifice Plates	10
		a) Less Installation Cost	10
		b) Bi-Directional Flow Measurement	10
		c) Shorter Up/Down Straight Pipe Run Requirements	11
		d) Lower Permanent Pressure Loss	11
	A.4.2	The Itabar-Sensor-Profile	12
		a) Design Advantages for Flow Measurement	12
		b) Large Pressure Ports and Pressure Channels	12
		c) Very Good Mechanical Stability	12
		d) Itabar-Sensors are better than any Cylindrical Sensor	13
		e) Sensor Profile with Integrated RTD Resistance Thermometer	14
	A.4.3.	Patented Itabar-Sensor Series (Flo-Tap)	15
		a) Retroactive Installation under Operational Conditions	15
		b) Removal without Process Shut-Down (Flo-Tap)	16
		c) Safe Operation with Second Packing Gland	17
		d) Construction of Wet-Tap Pitot Tubes	18
A.5		**Specification Sheet for Itabar-Flow-Sensor**	19
A.6		**Specification of Pitot-Tube-Sensors**	20
	A.6.1	Compact or Separate Version?	21
A.7		**Calibration of the Itabar-Flow-Sensor**	22
	A.7.1	Calibration Facility / Fa. ABB Göttingen (Germany)	25
	A.7.2	Test Protocols	26
	A.7.3	Documentation	32
		a) Available Certificates / Approvals	32
		b) Ordering Codes for Documentation	33
A.8		**Accessories for Itabar-Flow-Sensors**	34
	A.8.1	Shut-Off Devices for the Impulse Pipes	34
	A.8.2	Signal Transmitters	35
		a) Δp Transmitter INT-433	35
		b) Multivariable Transmitter 267 CS	39
	A.8.3	Resistance Thermometer (RTD) – PT-100 / R/I-Transmitter	43
		a) Resistance Thermometer (RTD) – PT-100	43
		b) R/I Transmitters for RTD-signals	45
	A.8.4	Air Purge Unit – LSP compact	50
	A.8.5	Digiflow 515 – Flow Computer	52

List of contents (continuation):

Chapt.		Title	Page
B		**Itabar Flow-Sensors for Liquids and Gases**	54
B.1		**General Information**	54
	B.1.1	Selection Criteria	54
	B.1.2	Sensor Heads and Mounting Parts	56
	B.1.3	Heat Insulation	58
	B.1.4	Saddle Flange Version for Cast / Pig Iron, Steel and AZ-Pipes	59
	B.1.5	Material Overview	61
	B.1.6	Technical Specifications	62
	B.1.7	Installation Position (Flow sensors for liquids and gases)	63
B.2		**Itabar-Flow-Sensors for Liquids and Gases (fixed installation)**	64
	B.2.1	Itabar-Flow-Sensors with Threaded Process Connection Types: IBR-15/20/21/25/26 (up to 588 psi) and IBR-35/36 (up to 235 psi)	64
		a) Description	64
		b) Drawings for IBR	65
		c) Order Data for IBR	67
		d) Order Specification Itabar-Flow-Sensors, Series IBR	68
		- d1) IBR-15	68
		- d2) IBR-20/21	69
		- d3) IBR-25/26	70
		- d4) IBR-35/36	71
		e) Ordering Codes for Instrument Connection and Shut-Off-Device for Itabar-Flow Sensors type IBR	72
	B.2.2	Itabar-Flow-Sensors with Flanged Process Connection Types: IBF-20/21/25/26/35/36/65/66 (up to 5801 psi)	73
		a) Description	73
		b) Drawings for IBF	74
		c) Order Data for IBF	76
		d) Order Specification Itabar Flow-Sensors, Series IBF	77
		- d1) IBF-20/21	77
		- d2) IBF-25/26	82
		- d3) IBF-35/36	87
		- d4) IBF-65/66	92
	B.2.3	Itabar-Flow-Sensors for Flue Gas Applications Types: IBF-100 (up to 232 psi [16 bar])	97
		a) Description	97
		b) Drawings for IBF-100	98
		c) Order Specification Itabar Flow-Sensors, Series IBF-100	99
		d) Ordering Codes for Instrument Connection and Shut-Off-Device for Itabar-Flow Sensors type IBF	101
B.3		**Itabar-Flow-Sensors for Liquids and Gases (Flo-Tap-Version) (Installation under pressure)**	102
	B.3.1	Itabar-Flow-Sensors (Flo-Tap Version with Threaded Process Connection) Types: FTN-20/21/25/26/35/36 (up to 87 psi [PN 6])	102
		a) Description	102
		b) Drawing for FTN	103
		c) Order Data for FTN	104
		d) Order Specification Itabar Flow-Sensors, Series FTN	105
		- d1) FTN-20/21	105
		- d2) FTN-25/26	106
		- d3) FTN-35/36	108

List of contents (continuation):

Chapt.		Title	Page
	B.3.2	Itabar-Flow-Sensors (Flo-Tap Version with Threaded Process Connection and Guide-Rod-Spindles) Types: FTM-20/21/25/26/35/36 (up to 580 psi [PN 40])	110
		a) Description	110
		b) Drawing for FTM	111
		c) Order Data for FTM	112
		d) Order Specification Itabar Flow-Sensors, Series FTM	113
		- d1) FTM-20/21	113
		- d2) FTM-25/26	115
		- d3) FTM-35/36	117
		e) Ordering Codes for Instrument Connection and Shut-Off-Device for Itabar-Flow Sensors types FTN & FTM	119
	B3.3	Itabar-Flow-Sensors (Flo-Tap Version with Flanged Process Connection and Guide-Rod-Spindles) Types: FTH-20/21/25/26/35/36/65/66 (up to 1450 psi [PN 100])	120
		a) Description	120
		b) Drawing for FTH	121
		c) Order Data for FTH	122
		d) Order Specification Itabar Flow-Sensors, Series FTH	123
		- d1) FTH-20/21	123
		- d1.1) Isolation Valve for the Sensor Profile, type FTH-20/21	127
		- d2) FTH-25/26	128
		- d2.1) Isolation Valve for the Sensor Profile, type FTH-25/26	132
		- d3) FTH-35/36	133
		- d3.1) Isolation Valve for the Sensor Profile, type FTH-35/36	137
		- d4) FTH-65/66	138
		- d4.1) Isolation Valve for the Sensor Profile, type FTH-65/66	142
		e) Ordering Codes for Instrument Connection and Shut-Off-Device for Itabar-Flow Sensors type FTH	143
C		**Itabar-Flow Sensors for Steam**	144
C.1		**General Information**	144
	C.1.1	Selection Criteria	144
	C.1.2	Selection of the Proper Sensor Type	144
	C.1.3	Selection of Options	144
	C.1.4	Steam Sensor Overview	145
	C.1.5	Installation Position (Flow sensors for steam)	146
C.2		**Itabar-Flow-Sensors for Steam Measurement (fixed Installation)**	147
	C.2.1	Itabar-Flow-Sensors with Threaded Process Connection Types: IBRD-20/21/25/26/35/36 (up to 235 psi and 392 °F)	147
		a) Description	147
		b) Drawings for IBRD	148
		c) Order Data for IBRD	149
		d) Order Specification Itabar-Flow-Sensors, Series IBRD	152
		- d1) IBRD-20/21	152
		- d2) IBRD-25/26	153
		- d3) IBRD-35/36	154
		e) Order Specification for Condensate Vessels, Instrument Connection and Shut-Off-Valves for Itabar-Flow-Sensors type IBRD	155

List of contents (continuation):

Chapt.		Title	Page
	C.2.2	Itabar-Flow-Sensors with Flanged Process Connection Types: IBFD-20/21/25/26/35/36 (up to 1450 psi and 842 °F)	157
		a) Description	157
		b) Drawings for IBFD	158
		c) Order Data for IBFD	159
		d) Order Specification Itabar-Flow-Sensors, Series IBFD	160
		- d1) IBFD-20/21	160
		- d2) IBFD-25/26	163
		- d3) IBFD-35/36	166
		e) Order Specification for Condensate Vessels, Instrument Connection and Shut-Off-Valves for Itabar-Flow-Sensors type IBFD	169
	C.2.3	Itabar-Flow-Sensors with Flanged Process Connection / for Superheated Steam Types: IBFD-26/36-HT (up to 5802 psi [400 bar] and 1202 °F [650 °C])	171
		a) Description	171
		b) Drawings for IBFD-HT	172
		c) Order Data for IBFD-HT	173
		d) Order Specification Itabar-Flow-Sensors, Series IBFD-HT	176
		-d1) IBFD-26-HT	176
		-d2) IBFD-36-HT	179
	C.2.4	Itabar-Flow-Sensors as Completely Welded Version / for Superheated Steam Types: IBFD-26/36-HTG (up to 5802 psi [400 bar]	182
		a) Description	182
		b) Drawings for IBFD-HTG	183
		c) Order Data for IBFD-HTG	183
		d) Order Specification Itabar-Flow-Sensors, Series IBFD-HTG	185
		-d1) IBFD-26-HTG	185
		-d2) IBFD-36-HTG	186
		e) Order Specification for Condensate Vessels, Instrument Connection and Shut-Off-Valves for Itabar-Flow-Sensors type IBFD-HT/HTG	186
		-e1) Pressure Rating Assembly Flange	186
		-e2) Combination Condensate Pots / Shut-Off-Valves	187
		-e3) Design Data Condensate Vessel	189
		-e4) Pressure-Temperature Table for Shut-Off-Valves	189
		-e5) Order Specification	191
C.3		**Itabar-Flow-Sensors for Steam (FloTap-Version) (Installation under Pressure)**	192
	C.3.1	Itabar-Flow-Sensors (Flo-Tap Version with Threaded Process Connection and Guide-Rod-Spindles) Types: FTMD-20/21/25/26/35/36 (up to 232 psi [16 bar])	192
		a) Description	192
		b) Drawing for FTMD	193
		c) Order Data for FTMD	194
		d) Order Specification Itabar Flow-Sensors, Series FTMD	195
		- d1) FTMD-20/21	195
		- d2) FTMD-25/26	197
		- d3) FTMD-35/36	199
		e) Order Specification for Condensate Vessels, Instrument Connection and Shut-Off-Valves for Itabar-Flow-Sensors type FTMD	201

List of contents (continuation):

Chapt.		Title	Page
	C.3.1	Itabar-Flow-Sensors (Flo-Tap Version with Flanged Process Connection and Guide-Rod-Spindles) Types: FTHD-20/21/25/26/35/36 (up to 580 psi [PN 40])	202
		a) Description	202
		b) Drawing for FTHD	203
		c) Order Data for FTHD	204
		d) Order Specification Itabar Flow-Sensors, Series FTHD	205
		- d1) FTHD-20/21	205
		- d1.1) Isolation Valve for the Sensor Profile, type FTHD-20/21	207
		- d2) FTHD-25/26	208
		- d2.1) Isolation Valve for the Sensor Profile, type FTHD-25/26	210
		- d3) FTHD-35/36	211
		- d3.1) Isolation Valve for the Sensor Profile, type FTHD-35/36	213
		e) Order Specification for Condensate Vessels, Instrument Connection and Shut-Off-Valves for Itabar-Flow-Sensors type FTHD	214
D		**Appendices**	215
D.1		**Selected Application Examples**	215
D.2		**Comparison Table Pressure Ratings acc. DIN and ANSI**	218
D.3		**Engineering Units Conversion Tables**	219
	D.3.1	Pressure Units	219
	D.3.2	Viscosity Units	220

A General Information

A.1 Introduction to Pitot Tube Flow Measurement

Pitot tubes are classified as Differential Pressure sensors for flow measurement.

The measuring principle of the pitot tube utilizes the differences between the pressure ridge on the upstream side of a bluff body and the static pressure on its down stream side.

ITABAR-pitot tube sensors, see sample Fig 1, are mainly used to measure the volumetric flow of liquids, gases and steam in closed pipes ranging from ½“ to 480“ (DN 20 to DN 12000).

Examples of their applications are precise volumetric flow measurement in batch processes, continuous measurement of liquid ingredients in the process industry, fuel, air, steam and gases as primary energy source as well as in control functions requiring a high degree of stability and repeatability.

Exemplary in comparison to almost all other flow measuring instruments is the ITABAR-sensor’s ease of installation. The installation consists of these steps: drilling of the pipe, weld-o-let is welded on to the pipe, ITABAR is inserted. Models Flo-Tap FT, see Fig 2, allow installation and removal without shutting the process down.

ITABAR-pitot tube sensors were developed with the goal of high reliability even under difficult conditions. ITABAR-pitot tube sensors are optimized in several ways with respect to fluid stream conditions. Advantages of the engineered sensor profile are their low permanent pressure loss as well as the consistent measurement accuracy over a wide range of Reynolds numbers.

For over two decades ITABAR-pitot tube sensors have been applied in the industrial world. Their exemplary reliability and excellent long-term use record resulted in broad acceptance by customers. Many measurements by independent institutes are testimony to the ITABA-sensor’s high measuring accuracy

Fig 1

Fig 2: Flo-Tap pitot tube sensor type Itabar® FTM-20 for installation and removal under pressure

A.2 Measurement Principle of Itabar®-Flow-Sensors

According to the continuity law derived by Bernoulli and the energy equation, the sum of the pressure energy and the potential and kinetic energy of a flowing fluid inside a pipe and in conditions of stationary and frictionless flow is the same at any time and in any part of the pipe

$$p_{stat} + p_{dyn} = const \qquad \text{(Equation 1)}$$

The factor p_{stat} is the static pressure equally distributed in all directions. The other term in the equation represents the dynamic pressure, effective in the flow direction, p_{dyn}.

For flowing fluids in horizontal pipes, with a small velocity compared to the Mach-number (Ma <<1), the dynamic pressure p_{dyn} of a fluid with a flowing velocity v, a density ρ and a resistance factor ζ is calculated as:

$$p_{dyn} = \zeta \frac{\rho}{2} v^2 \qquad \text{(Equation 2)}$$

Inserting a fixed body into a flowing fluid causes the flow to dam up immediately upstream of the body and to be completely zero at S2 ,see Fig 3. At this point the total pressure p_{S2}:is

$$p_{S2} = p_{stat} + p_{dyn} \qquad \text{(Equation 3)}$$

The ports of the sensor's downstream side are only affected by the direction-independent static pressure p_{stat}. The difference in both pressures, the differential pressure Δp, which is a function of the velocity with which the inserted body is impacted, see Fig. 4.

$$\Delta p = p_{S2} - p_{S1} \qquad \text{(Equation 4)}$$

Substituting Equation. 2 and 3 into 4 results in

$$\Delta p = \zeta \frac{\rho}{2} v^2 \qquad \text{(Equation 5)}$$

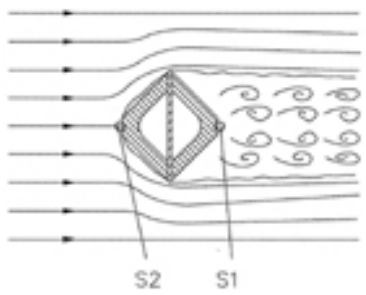

Fig 3: Schematic sketch fluid flow pattern at location

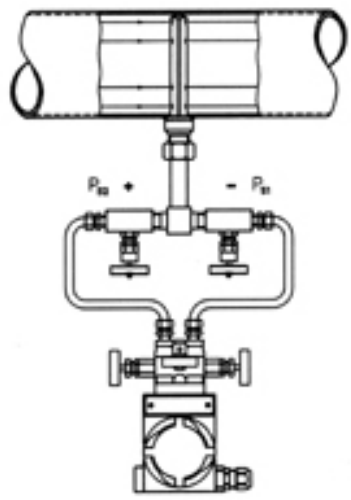

Fig 4: Schematic sketch of generation of differential pressure Δp

The volumetric flow can be calculated using the continuity law with a pipe area A and an average flow velocity. The following equations can be derived

Measured value	Formula for SI Units	Equation
Volumetric flow for gases under standard conditions	$Q_{vn} = k * 1{,}0159 * A\varepsilon \sqrt{\frac{2\ \Delta p\ P_b\ Z_n\ T_n}{\rho_n\ T_b\ Z_b\ P_n}}$	6
Volumetric flow for gases under operating conditions	$Q_v = k * 1{,}0159 * A\varepsilon \sqrt{\frac{2\ \Delta p}{\rho_b}}$	7
Mass flow for gases and steam	$Q_m = k * 1{,}0159 * A\varepsilon \sqrt{2\ \Delta p\ \rho_b}$	8
Mass flow for liquids	$Q_m = k * 1{,}0159 * A \sqrt{2\ \Delta p\ \rho_b}$	9
Volumetric flow for liquids	$Q_v = k * 1{,}0159 * A \sqrt{\frac{2\ \Delta p}{\rho_b}}$	10

The following definitions apply :

	Dimension	Units in equations				
		6	7	8	9	10
Δp	Differential pressure at sensor profile	Pa	Pa	Pa	Pa	Pa
ρ_n	Medium density at standard conditions	kg/Nm³	---	---	---	---
ρ_b	Medium density at operating conditions	kg/m³	kg/m³	kg/m³	kg/m³	kg/m³
ε	Expansion factor	1	1	1	---	---
A	Cross sectional area of the pipe	m²	m²	m²	m²	m²
D_i	Pipe inside diameter	---	---	---	---	---
k	k-factor	1	1	1	1	1
P_b	Operating pressure	Pa	---	---	---	---
P_n	Absolute pressure of gas at standard conditions	Pa	---	---	---	---
Q_m	Mass flow	---	---	kg/s	kg/s	---
Q_v	Volumetric flow	---	m³/s	---	---	m³/s
Q_{vn}	Volumetric flow at standard conditions	Nm³/s	---	---	---	---
T_b	Temperature of gases at operating conditions	K	---	---	---	---
T_n	Temperature of gases at standard conditions	K	---	---	---	---
Z_b	Real gas factor at operating conditions	1	---	---	---	---
Z_n	Real gas factor in standard conditions	1	---	---	---	---

The expansion factor needed to calculate the flow of gases and steam is computed as follows :

$$\varepsilon = 1 - \frac{\Delta p}{k(...)P_b}\left\{\left(1 - \frac{2b}{\sqrt{\pi F}}\right)^2 0{,}31424 - 0{,}09484\right\} \qquad \text{(Equation 11)}$$

Symbol	Variable	Units
ε	Expansion factor	1
Δp	Differential pressure at sensor profile	Pa
Pb	Operating pressure	Pa
k	Isotropic exponent of gases (also: ratio of specific temperatures of ideal gases)	1
b	Width of sensor profile perpendicular to flow direction	m
F	Cross sectional area of pipe	m2

For example: for one-atom (two-, three-atom) gases the isotopic exponent k of the gas has a value of k = 1.66 (4 and 3). The width of the sensor profile perpendicular to the flow direction depends on the sensor type.

A.3 Required Fluid Conditions

Pitot tube sensors, such as orifice plates, flow nozzle or venturi tubes are classified as flow measuring devices which utilize differential pressure to measure volumetric flow. The technical descriptions in (German) DIN 1952 „Durchflussmessung mit Blenden, Düsen und Venturirohren in voll durchströmten Rohren mit Kreisquerschnitt“ are analogue to pitot tubes:

- The fluid has to completely fill the pipe so that the measured differential pressure is representative of the volumetric flow. Fluids in partially filled pipes can only be measured if a full pipe can be arranged (e.g. by means of a siphon)
- The fluid must be single-phase. Two-phase fluids (e.g. water-air mixtures) cannot be measured.

The average flow velocity v_m and the kinematical viscosity ν of the fluid to be measured in a given pipe size with an inside diameter d must reach a Reynold’s number value Re > 3150 according to the equation

$$\mathrm{Re} = \frac{v_m \, d_i}{\nu} \qquad \text{(Equation 12)}$$

Meaning: the flow has to be sufficiently turbulent. Fluids of laminar nature cannot be measured with pitot tubes. Fluids may contain small particles or bubbles. The pressure generated in front of the sensor apertures causes a deflection of the particles or bubbles. Fluids which tend to crystallize will quickly plug the pressure tubes of the sensor and therefore cannot be measured with pitot tubes. Gases and gas mixtures containing dust can coat the sensor to an undesirable degree. To clean such dust deposits the air urge unit LSP (Fig 5) can be applied. This instrument will automatically flush out the sensor with air pressure in programmable intervals and durations. For flue gas mixtures a sensor version is recommended, which allows mechanical cleaning from both ends without having to take the sensor out of the pipe (see Fig 6).

In steam measurement applications condensate pots are used, inside of which a constant transition from steam to condensate and vice versa occurs. The pressure transfer is achieved via water columns.

Fig. 5: Air purge unit LSP for automatic cleaning of pitot tubes used in gas and gas mixtures containing dust or bubbles

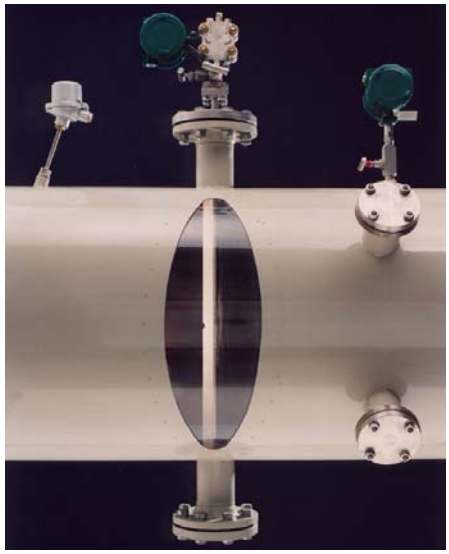

Fig. 6: Photo of sensor version IBF-100, designed specifically for flue gas measurement, installed in a (for demo purposes) transparent pipe. The sensor is accessible from both sides and allows mechanical cleaning without de-installation.

A.4 Advantages of Itabar®-Flow-Sensors

A.4.1 Advantages in Comparison to Orifice Plates

a) Less Installation Cost

Compared to an orifice plate the ITABAR-sensor reduces material- and labor costs for the installation as well as operating expenses.

Part of the installation material costs of an ITABAR-sensor are the expenses for a weld boss and – depending on the sensor type – for a counter support fitting. The material costs for an orifice installation consist of two flanges and the necessary screws and hardware. The advantage in the ITABAR-sensors material costs are especially high for: large diameter pipes, pipe materials of exotic materials because of chemical compatibility issues, pipes for high pressure applications.

Labor costs for an ITABAR-sensor or orifice plate installation must include the wages for the welders. The installation of a weld boss requires – depending on the sensor type – a weld seam of approx. 10 cm (4“). The installation of a DN100 /4“ (DN500/20“) requires a weld seam of approx. 36 cm /14“ (approx. 628“). The time needed to install an orifice plate is approx. 12 hours, as compared to approx.1.5 hours for an ITABAR-sensor. The ITABAR-sensor in this case saves 10.5 labor hours.

The total savings in material- and labor costs which can be realized by using an ITABAR-sensor are at least 25% in a 4“ pipe installation and at least 70% in a 20“ pipe installation.

b.) Bi-Directional Flow Measurement

The profile of all ITABAR-pitot tube sensors is designed to be symmetrical to the plane between the pressure channels. This arrangement results in the same resistance values and thus the same k-factor with respect to the fluid properties during forward as well as reverse flow. The differential pressures generated by a given flow velocity are the same for flow in either direction. They only differ in the +/- sign

This constitutes an advantage over to the orifice plate, see Fig 7), which - because of its angled downstream corner – has different resistance values for forward and reverse flows. It would indicate widely different differential pressures for the same flow velocity in opposite directions.

The differential pressure measurement and processing can be accomplished with either one or two signal converters. The use of two signal converters is justified in cases requiring a high resolution or if separate signals are needed for forward and reverse flow.

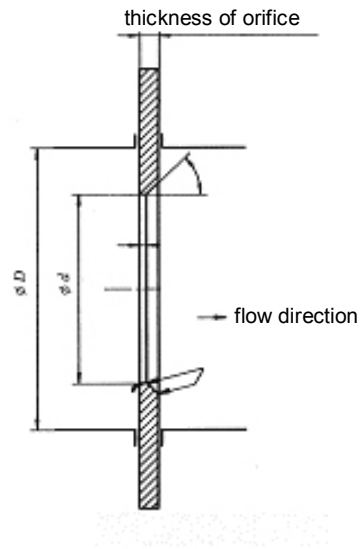

Fig. 7: Orifice plate for volumetric flow measurement

c.) Shorter Up/Down Straight Pipe Run Requirements

In order to increase the ITABAR-sensor's measurement accuracy the dynamic and static pressures are measured at four points along the sensor profile and averaged. A non-symmetrical flow profile thus has a smaller influence on the measured result. This leads furthermore to shorter up/down stream straight pipe run requirements. For example: The ITABAR-sensor requires 7 straight pipe diameters downstream of a 90°-bend. An orifice plate requires 10 to 46 times as much depending on the β ratio.

d.) Lower Permanent Pressure Loss

The sensor profile of the ITABAR-sensor is optimized with respect to the conditions of a flowing fluid and causes – in comparison to an orifice plate – a considerably smaller permanent pressure loss. The following application example is to illustrate this point: pipe size 10 inches (DN 250 PN 16); fluid: water; fluid temperature T = 70 °F (20 °C); operating pressure p = 29.4 psia (2 bar abs); volumetric flow Q_v = 770 GPM (175 m³/h) and average flow velocity = 3.2 FPS (0,99 m/s).

Type	Ratio of diameters ß	D/ mm	d/ mm	Diff. Pressure/ mbar	Pressure loss/ mbar	Ratio of perm. pressure loss vs differ. pressure / %	Required up stream straight pipe run after 90°-bend	Required downstream straight pipe run before 90°-bend
ITABAR IBR-25	---	250,4	---	12,48	1,36	10,9	7 x DN	3 x DN
Orifice plate	0,25	250,4	62,6	2874	2730	95,0	10 x DN	4 x DN
Orifice plate	0,3	250,4	75,1	1386	1247	90,0	10 x DN	5 x DN
Orifice plate	0,35	250,4	87,6	748	636	85,0	12 x DN	5 x DN
Orifice plate	0,4	250,4	100,2	439	351	80,0	14 x DN	6 x DN
Orifice plate	0,45	250,4	112,7	274	205	74,8	14 x DN	6 x DN
Orifice plate	0,5	250,4	125,2	180	126	70,0	14 x DN	6 x DN
Orifice plate	0,55	250,4	137,7	123	80	65,0	16 x DN	6 x DN
Orifice plate	0,6	250,4	150,2	87	52	59,8	18 x DN	7 x DN
Orifice plate	0,65	250,4	162,8	63	35	55,6	22 x DN	7 x DN
Orifice plate	0,7	250,4	175,3	47	23,4	49,8	28 x DN	7 x DN
Orifice plate	0,75	250,4	187,8	35,5	16	45,1	36 x DN	8 x DN

As this example illustrates it is possible to reduce the permanent pressure loss of an orifice plate by selecting the proper diameter-ratio ß = d/D. The price to be paid for this is a considerable increase in longer straight pipe run requirements. The comparatively higher permanent pressure loss of orifice plates can be explained by their increased influence on the flow profile and related generation of eddy currents.

In summary: Compared to orifice plates pitot tubes have the advantage of causing considerably lower permanent pressure losses while generating useful differential pressures. A further advantage is the need for shorter up/down stream straight pipe requirements.

The ITABAR-sensor's lower permanent pressure loss reduces the energy- and thus operating costs of a measurement point considerably. In many applications the replacement costs of an ITABAR-sensor for an orifice plate are amortized within a very short time period

A.4.2 The Itabar®-Sensor Profile

a.) Design Advantages for Flow Measurement

Unique Sensor Profile

The design of the ITABAR-sensor profile, see Fig. 8, is optimized with respect to fluid flow properties, and meets the technical challenges of accurate measurement as well as static and sensor-oscillating problems. It represents a step forward in technical development.

Excellent Linearity

A significant improvement in the sensor design with respect to the fluid properties is the shape of the sensor profile. The fluid separation takes place at the same spot on the sensor over a wide range of Reynolds numbers, which results in minimal Reynolds number dependency. This specially designed ITABAR-sensor profile achieves excellent linearity over a wide measuring range.

Exemplary Reproducibility

The form design of the sensor profile not only improves the linearity but also the reproducibility of the measurement in cases of averaging within certain time intervals. The result is especially positive with shorter time intervals.

Superior Averaging

In order to reduce the influences of in most cases less than ideal flow profiles, the differential pressures representing the local flow velocities are measured at four points, averaged and processed. Each of these four measuring points has pressure sensing apertures located opposite from each other. The positioning of these pressure apertures is designed for fluid flow profiles as they are encountered in real applications.

Fig. 8: Sensor profile of pitot tube model 35/36 in a cut-away view to illustrate the two pressure channels near the pressure ports..

b.) Large Pressure Ports and Pressure Channels

Large diameter pressure sensing ports and pressure channels allow the long term uninterrupted use even in contaminated fluids. Condensate in form of drops can more easily flow off through the larger areas. A mechanical blockage of the pressure channels through condensate drops is thus eliminated. The table below lists the characteristic dimensions depending on the type of sensor.

	Sensor Type				
	15	20/21	25/26	35/36	65/66/100
Width of profile transverse to flow	11 mm	12 mm	25,4 mm	42 mm	56 mm
Height of profile in flow direction	10,5 mm	11 mm	23 mm	36 mm	50 mm
Diameter of pressure sensing ports	4 mm	4 mm	8,5 mm	10 mm	16 mm
Cross sectional area of pressure channel	28 mm²	14 mm²	62 mm²	78 mm²	113 mm²

c.) Very Good Mechanical Stability

The mechanical stability in situations of static and dynamic stress to the sensor profile is one of the most important criteria in the constructive design of the sensors.

The dislodging of a one-side mounted sensor profile through static stress caused by the flowing medium is inversely proportional to the 2nd degree axial area-momentum of the sensor.. For this reason the ITABAR-pitot tube sensor is designed with a very high 2nd degree axial area-momentum. Similar arguments are valid for a sensor's resonance-frequency oscillations, which are determinant for dynamic stresses.

Commercially available pitot tubes made of only 1 mm thick stainless steel sheet metal have a low 2nd degree axial area-momentum. The mechanical stability of such thin-sheet sensors under static and dynamic stresses is lower compared to the ITABAR-sensor (e.g. as shown in Fig 8).

d.) Itabar®-Sensors are better than any Cylindrical Sensor

Pitot tube sensors with a cylindrical sensor profile do not belong to the same class as ITABAR pitot tube sensors. The differences lie in the form and design of cylindrical sensors.

A typical cylinder-shaped sensor consists of a thin walled pipe with four sensing ports to measure the total pressure and one sensing port to measure the static pressure. The static pressure is lead to the outside via a thin piece of pipe located inside the sensor profile.

The main disadvantages are measurement inaccuracies and poor reproducibility. The reasons for this are a weakly defined technical relationship to fluid flow properties and thus a Reynolds number dependence. Contrary to a sharp-edged sensor profile design the fluid separation point is not fixed on the sensor (see Fig 9). As a result the resistance value cw is very much Reynolds number dependent, see Fig. 4.4. A sensor's k-factor is derived from its resistance value as follows:

$$k = \sqrt{\frac{1}{c_w}}$$

For example a 10% change in the k-factor causes a change in the measured volumetric flow value of also 10%. For this reason a k-factor dependence on Reynolds numbers is not desirable.

Further disadvantage of cylindrical sensors is their lack of mechanical stability and their inaccurate performance in bi-directional flow measurement.

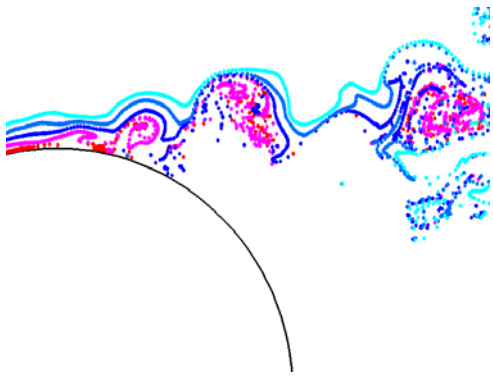

Fig. 9: Stream lines illustration at the separation area of a cylindrical shaped pitot tube sensor. Using a finite-element-method calculation, this computer graphic shows the fluid conditions at a Reynolds number Re = 20.000

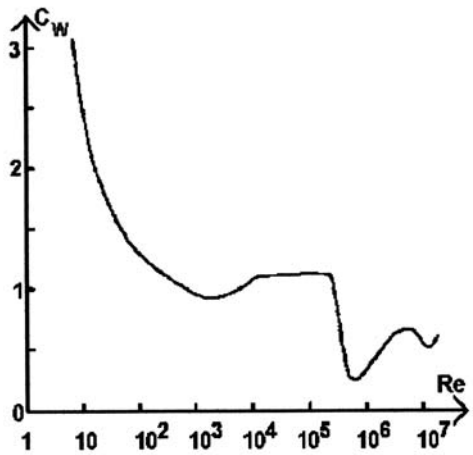

Fig. 10: Resistance value c_w of a cylindrical pitot tube sensor as a function of Reynolds number

e.) Sensor Profile with Integrated RTD resistance thermometer

In order to measure the fluid temperature all Itabar-pitot tube sensors – excepting IBFD-HT, IBFD-HTG and types -20/21 – can optionally be equipped with a RTD resistance thermometer, see Fig. 11. The advantages of the selected thermometer are as follows:

- The resistance thermometer is rod shaped, of rugged design for long-term use.
- The 316SS-tube provides a reliable protective cover fort he resistance thermometer.
- The design is made with long-term reliable components for industrial applications with increased demands on the material.
- The temperature sensor is of 3-wire design in order to reduce the effective wire resistance.
- The standard resistance thermometer is usable in a temperature range from -100 to +450 °C.

The constructive solution to insert the RTD is unique and convinces with the following advantages:

- The RTD is inserted into the sensor profile (Fig. 12, cross sectional view of sensor profile for RTD assembly) This design avoids the RTD to be wetted, also it is not exposed to operational pressure.
- This design, in combination with the rod-shaped RTD-design, allows easy and quick installation and removal under pressure.

The temperature sensor is placed in the sensor axis in-between the two pressure channels. After thermal equalization in the RTD's environment it measures the fluid temperature along the pipe axis.

Fig 11: Pitot tube sensor type IBR with integrated RTD. Right side: opened junction box

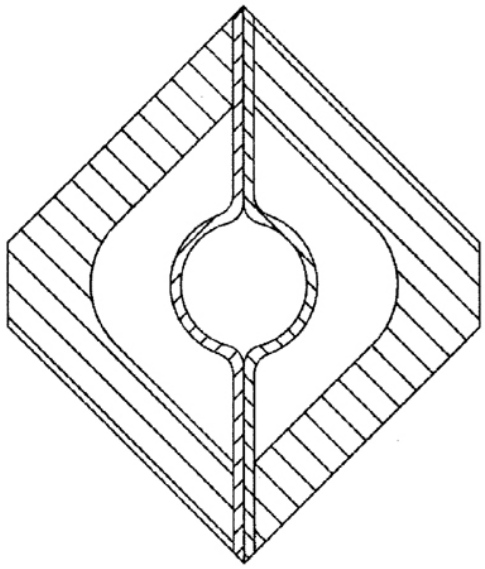

Fig. 12: Cross-sectional view of a type 25/26 sensor profile for insertion of a resistance thermometer

A.4.3 Patented Itabar®-Sensor Series Flo-Tap

a.) Retroactive installation under operational conditions

The current level of technical development allows only a few flow measurement devices to be installed retroactively, when a process interruption is expensive and to be avoided. Some criteria to be considered as part of the flow meter selection process are: the type of fluid to be measured, the desired measurement accuracy as well as purchase and installation costs. The following table compares several competing flow metering technologies, which can be installed under pressure, with respect to these criteria:

Flow Measurement Instrument	Applicable fluids	Method applied to read average flow velocity	Accuracy	Purchase costs	Installation costs
Pitot tube sensor ITABAR, series Flo-Tap	Liquids, gases, steam	Averaging of four flow representative locations	± 1 % of rate	low	medium
Non intrusive ultra sound sensors (transit time)	Liquids with air- or gas content of < 3 Vol. %	Averaging along the ultrasonic beam between ultrasonic sensors	± 1-3 % of rate	high	low
Non intrusive ultra sound flow sensor (Doppler)	Liquids with evenly distributed air- ,gas- or particles	Averaging along narrow ultrasonic beam	± 1 % of rate	medium	low
Electro-magnetic sensors (insertion type)	Liquids with conductivity > 5 µS	Localized measurement in vicinity of sensor electrodes	± 2-3 % of rate	low	medium

For many applications, which require an under-pressure installation, the ITABAR pitot tube series Flo-Tap is the first choice. A retroactive Flo-Tap-sensor installation under pressure is done in the following steps:

1. Welding of the assembly stud with assembly flange to the pipe, see Fig. 13a.
2. Assembly of isolation valve to the assembly stud, see Fig. 13a lower picture.
3. Installation of the tapping tool, see Fig. 13b.
4. Drilling of the pipe, see Fig.. 13c.
5. Withdrawal of the tapping tool, see Fig. 13d.
6. Closing of isolation valve and removal of tapping tool, see Fig. 13e.
7. Assembly of Flo-Tap pitot tube sensor, opening of isolation vale and insertion of flow sensor profile, see Fig. 13f.

b.) Removal without process shut-down (Flo-Tap)

All Flo-Tap versions of the ITABAR-sensor allow the removal under pressure. These features are valuable in applications requiring

- a periodic check of the flow sensor's measurement accuracy
- an exchange after extended service in abrasive fluids or
- cleaning during normal maintenance operations

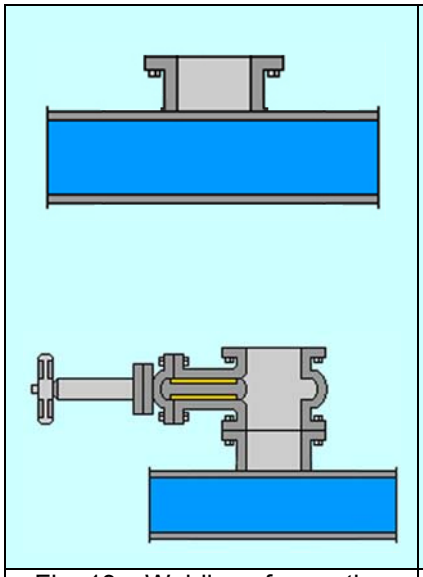	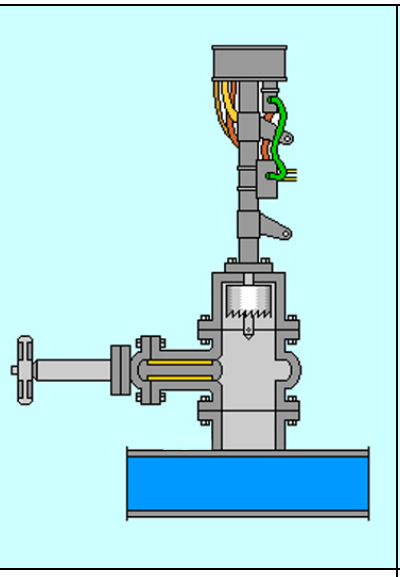	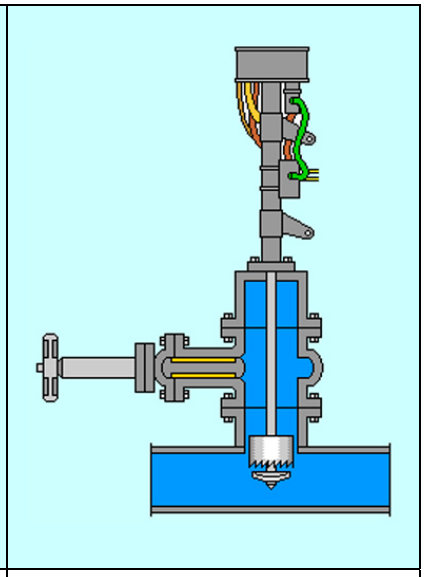
Fig. 13a: Welding of mounting stud with mounting flange to the pipe (upper picture) and mounting of the isolation valve to the mounting stud (lower picture)	Fig. 13b: Mounting of the tapping tool	Fig. 13c: Drilling the pipe
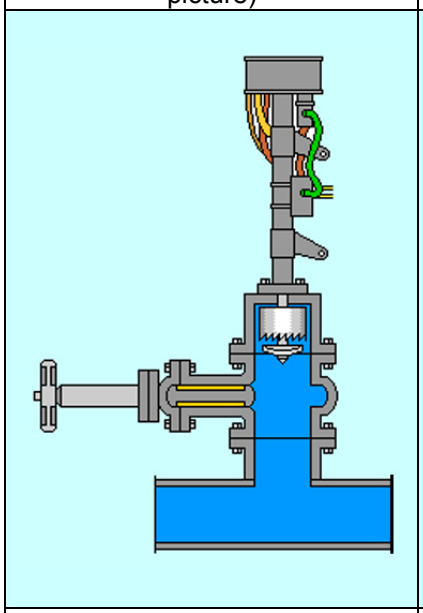	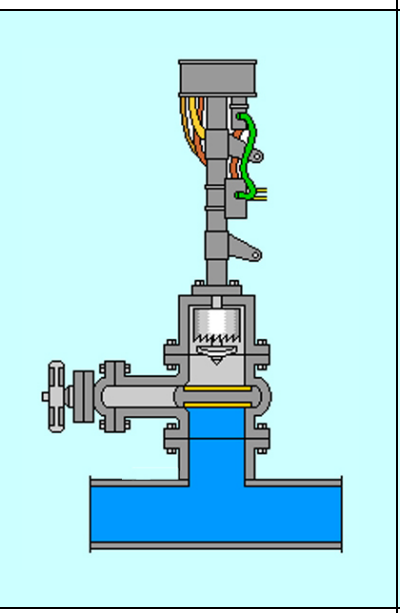	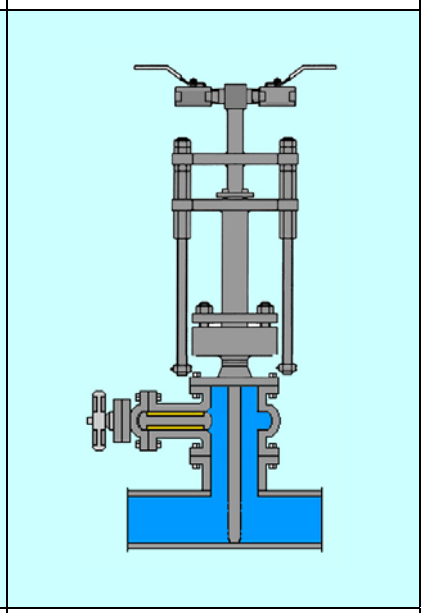
Fig. 13d: Pull back of tapping tool	Fig. 13e: Closing of isolation valve and removal of tapping tool	Fig. 13f: Mounting of the FloTap-Sensor, opening of the isolation valve and insertion of the pitot tube sensor

c.) Safe operation with second packing gland

The current level in technical design of Flo-Tap pitot tube sensors is marked by one packing gland on the far end of the process isolation valve (see Fig 14). This type of construction can lead to accidents in practical installations.

Pitot tubes are often subjected to mechanical stresses with static and dynamic components under varying operating conditions. The forces impacting on the sensor profile can cause irregular or resonant oscillations. Depending on the amplitude and the frequency of this stress the material can weaken and the sensor can break.

For this reason a pitot tube sensor profile with only one single packing gland and because of its unsupported length is in danger of being damaged.

In order to avoid such accidents all ITABAR® Flo-Tap-sensors are equipped with two packing glands (see Fig 15). This measure increases a sensor's resonant frequency by such a magnitude that the material cannot easily weaken even in severe operating conditions.

Intra Automation GmbH has this design patented and is the only manufacturer of pitot tube which are equipped with a second packing gland.

ITABAR® models FTM, FTH, FTMD and FTHD are all equipped as standard with a pair of threaded rods (mat 316 SS) (see Fig. 15). A wrench is required to remove and install the sensor. The removal/installation is made faster and easier with a threaded wheel. The housing is made of aluminum, the wheel of carbon steel.

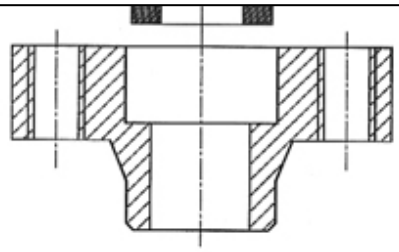

Fig. 14: Itabar-Flo-Tap-Sensor with second packing gland

d.) Construction of Wet-Tap Pitot Tubes

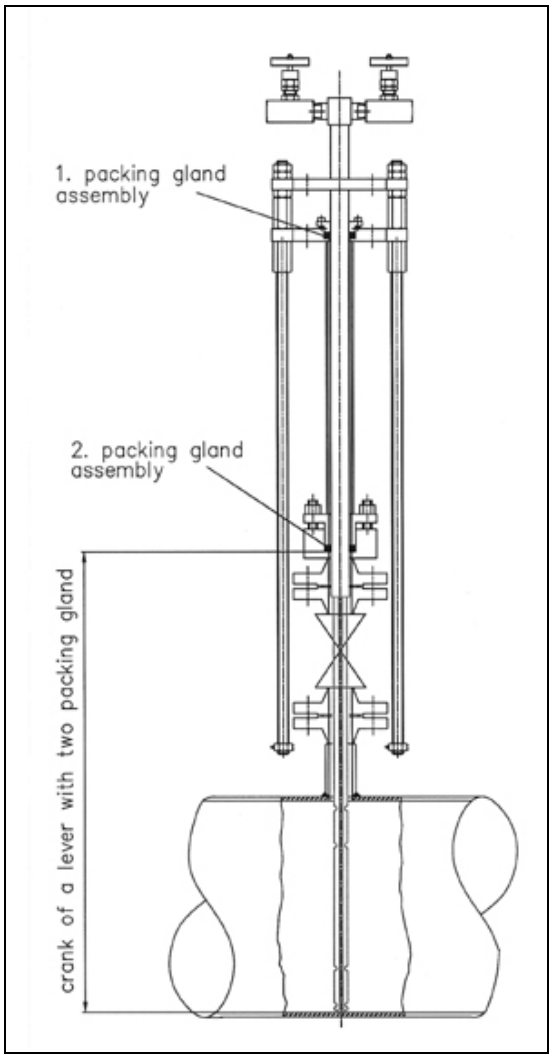

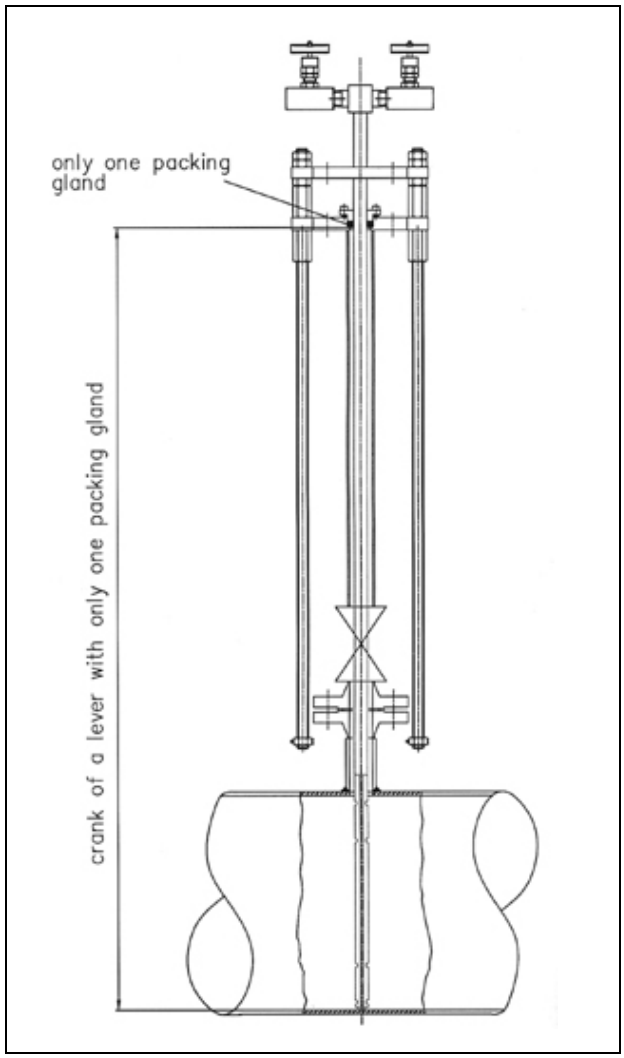

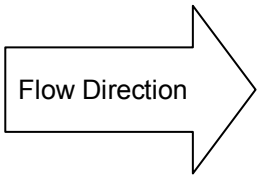

Fig. 15: ITABAR pitot tube with two packing glands. The short leverage practically eliminates the danger of the sensor breaking.

Fig. 16: Conventional pitot tube without prevention of material weakening. The long leverage increases the likelihood that the sensor might break

A.5 Specification Sheet for Itabar®-Flow-Sensor

The selection of the proper pitot tube sensor can be made quickly and reliably by this manufacturer if the operational data about the existing pipe line, the fluid and the desired version are made available according to the table below.

General Information:

Client:	
Reference-No.:	
TAG-No.:	

Pipeline:

Material:			Nom. pressure		psi g
Pipe inside diameter		Inch	Wall thickness		Inch
Wall thickness insulation		inch			

Fluid:

Name		liquid	☐	steam	☐	gas	☐
Isentropic exponent:							
Compressibility factor:							
Flow direction:		horizontal	☐			vertical	☐

Physical value	Min.	Operation	Max.	Unit
Flow:				
Temperature:				
Pressure; abs. ☐ rel. ☐				
Standard density:				
Operational density:				
Dynamic viscosity:				

Requested version:

Special pipe assembly with threaded weld-o-let:	☐	
Special pipe assembly, flanged version:	☐	
	- DIN-Flanges:	☐
	- ANSI-Flanges:	☐
Wet-tap version of Itabar-sensor required:	☐	
Compact version (if technically possible):	☐	

Please take a copy, fill it in and send it to: info@intra-automation.de or Fax No. +49-(0)2181/64492.

A.6 Specification of Pitot-Tube-Sensors

Specifying a pitot tube sensor starts with the selection of a fitting version for a specific application

For a better understanding the meaning of the sensor-version nomenclature will be explained in the following. Pitot tube sensors which start with the letter „IB..“ are designed for fixed (installation not under pressure) installations. The letter „R“ („F“, „G“) indicates a threaded (flanged, welded) process connection between the pipe and the sensor's assembly components. All sensors, which are used to measure steam have the letter „D“ at the end of the model name. The additions „HT“ or „HTG“ stand for „High Temperature“. Pitot tube sensor series „Flo-Tap“ is indicated by the letter „FT' at the beginning of the model name. They can be installed and removed under pressure conditions (wet-tap design). The letters „N“ („M“, and „H“) signify their possible use in low („N“) and medium and high operating pressure applications, with „D“ for steam use. Model series 21, 26, 36 and 66 differ from series 20, 25, 35 and 65 in that they come with a counter-end support, which serves to avoid mechanical stress caused by high flow velocities and high impact pressures or sensor-resonance oscillations.

Chapters B.1.1 and C.1.1 cover in detail the selection criteria for the various ITABAR- sensor model series, depending on the specific operating pressure, operating temperature and the desired assembly and installation design.

The WINFLOW sizing and model selection program serves to calculate and configure a pitot tube sensor. The WINFLOW program (program window see Fig 17) calculates the following as a function of the parameters for a specific measurement point:

- the differential pressures generated under varying operating conditions,
  - the permanent pressure loss caused by the sensor,
  - the sensor resonance and – if need be – it recommends a sensor with counter support,
  - the sensor oscillating frequency at operating conditions,
- the maximum allowable differential pressure,
- the maximum allowable flow for the selected sensor,
- the average flow velocity and
- the viscosity and density of commonly measured fluids under operating conditions.

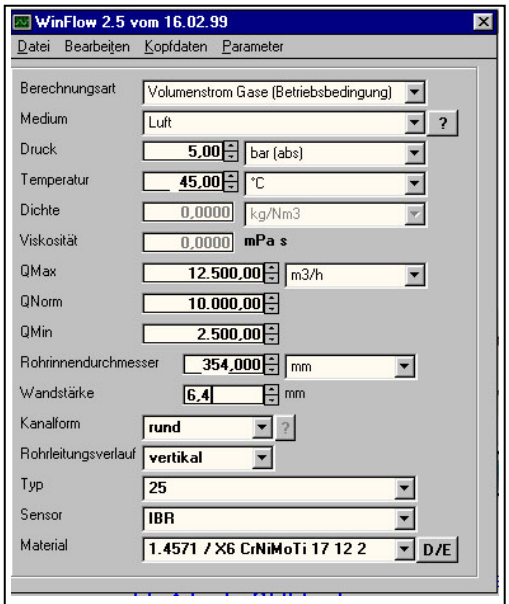

Fig. 17: The program window of WINFLOW

The WINFLOW program can be ordered at no charge by any customer and in the desired format. The selection process can also be done by this manufacturer if the customer has furnished all required information mentioned in chapter 5 „Specifications for ITABAR flow Sensors.

The order specifications are selected via a simple to use order specification key, which has the same format for all sensors and which shows the variety of the in modules constructed versions. It enables a sensor specific selection for almost any application.

A.6.1 Compact or Separate Version?

The compact or the separate versions describe the assembly of the sensor components. In the compact version the pitot tube sensor, a separate 3-or 5-way manifold and a transmitter are assembled together into one compact unit (see Fig 18). In the separate version the transmitter and the sensor are separated from each other and are connected via conduit-pipes, (see Fig. 19).

Fig. 18: Example of a compact version with flange plate, 3-way manifold and DP transmitter

Abb. 19: Example of a separate version with 3-way manifold and DP transmitter

The compact version (see Fig 18) offers obvious cost advantages compared to the separate version (see Fig 19). Assembly- as well as material expenses are eliminated for:

- two ball valves
- two conduit fittings
- one mounting bracket for the DP transmitter
- the fixed conduit and
- two conduit fittings on the DP transmitter
- assembly time

A.7 Calibration of the Itabar®-Flow-Sensor

In order to achieve the highest accuracy for the ITABAR-flow-sensors, they were tested on a PTB tested and approved calibration facility. The objective was to determine the absolute measurement error at minimum as well as maximum flow.

The measuring turn-down was 1:5, the Reynolds number influence was to be determined and to be integrated into the Winflow Program, so that the user can demand the highest performance from the product.

Tested pipe diameters inches (mm)	Sensor type
ID 12.047 (306 mm)	IBF-26/36/66
ID 15.748 (400 mm)	IBF-26/36/66
ID 19.685 (500 mm)	IBF-26/36/66
ID 23.543 (598 mm)	IBF-26/36/66
ID 39.291 (998 mm)	IBF-26/36/66
ID 63.307 (1608 mm)	IBF-26/36/66

Intra-Automation manufactured several different pieces of pipe for these tests, which could be inserted into the hydraulic test stand. The pipe-layout was measured with a tolerance of + 1 mm.

The conversion from the differential pressure into a mA signal was done with a DP transmitter manufactured by Endress + Hauser, which was calibrated + 0,1 % of full scale.

The water temperature and the pressure were read at the calibration stand. The output signal of the electrical DP transmitter was transmitted in the form of pulses to the ABB computer and were compared directly with the calibration standard values.

Six measurements were automatically taken at every flow range in intervals of 100 seconds. The measurement errors at each interval were averaged.

With the help of these calibrations it was possible to reach an accuracy of + 0,3 % for all ITABAR-sensors. In the ongoing manufacturing process the width of all sensors is manufactured with and checked for a tolerance as listed in the following table

Sensor types	Manufacturing tolerance
IBR/IBF-15	+ 0,05 mm
IBR/IBF-20/21	+ 0,05 mm
IBR/IBF-25/26	+ 0,05 mm
IBR/IBF-35/36	+ 0 mm - 0,1 mm
IBR/IBF-65/66/100	+ 0 mm - 0,1 mm

Against this background Intra-Automation guarantees an accuracy of + 0,3 % for ITABAR-flow-sensors.

MEN

Mess- und Eichwesen Niedersachsen
- Landesbetrieb -
Office of Legal Metrology of the state of Niedersachsen (Germany)

DIE BEI DEN MESSUNGEN VERWENDETEN NORMALE SIND AUF DIE NATIONALEN NORMALE BEI DER PHYSIKALISCH-TECHNISCHEN BUNDESANSTALT RÜCKGEFÜHRT.
THE STANDARDS USED FOR THE MEASUREMENTS ARE TRACEABLE TO THE NATIONAL STANDARDS AT THE PHYSIKALISCH-TECHNISCHE BUNDESANSTALT.

Prüfschein
Inspection certificate

Nummer *Number*	20011647
Gegenstand *Object*	**Magnetisch – induktiver Durchflussmesser**
Identifikation *Identification*	Durchflussaufnehmer mit Seriennummer 8901N1738/A3 Messumformer MAG - XH mit Seriennummer 8901N1738/B3
Hersteller *Manufacturer*	Fischer & Porter GmbH
Antragsteller *Applicant*	ABB Automation Products GmbH Dransfelder Straße 2 37079 Göttingen
Anzahl der Seiten der Anlage *Number of pages of the addendum*	eine
Ort und Datum der Prüfung *Place and date of inspection*	Göttingen, 20. September 2001

Gültigkeit der Prüfung bis 31. Dezember 2002
This inspection is valid until

Stempelzeichen *Marking* 8 D **01**

Prüfscheine ohne Unterschrift und Dienstsiegel haben keine Gültigkeit. Dieser Prüfschein darf nur unverändert weiterverbreitet werden.
Inspection certificates without signature and official stamp are not valid. This inspection certificate may only be reproduced in unchanged form.

Ort und Datum *Place and date*

Dienstsiegel *Official stamp*

MESS- UND EICHWESEN NIEDERSACHSEN

Im Auftrag *By order*

Hannover, 24. September 2001

Wohlthat

Mess- und Eichwesen Niedersachsen, Goethestraße 44, 30169 Hannover Telefon 0511 1266220 Telefax 0511 1266300

Seite 1 der Anlage zum Prüfschein Nr. 20011646
Page 1 of the addendum to inspection certificate number

Zusätzliche Angaben zum Gegenstand
Additional comments concerning the object

Nennweite DN 500

Prüfverfahren
Test procedure

Die Messnormale wurden entsprechend der „Richtlinie für die Eichung von Volumenmessgeräten für strömendes Wasser und Anforderungen für die Normale" vom 13. Juni 1996 geprüft.

Umgebungsbedingungen
Environmental conditions

Bei der Prüfung darf die Wassertemperatur 30 °C nicht überschreiten.

Ergebnis
Result

Durchfluss	Abweichung
m³/h	%
3000	-0,04
2250	-0,05
1500	-0,05
600	-0,35
1500	-0,09
1125	-0,21
800	0,32
300	-0,82

Der Zähler entspricht den „Anforderungen für Normale" und kann als Referenzzähler verwendet werden.

Messunsicherheit
Uncertainty of measurement

Die Messunsicherheit wurde nicht bestimmt.

Hinweis
Notes

Die Prüfung verliert ihre Gültigkeit vorzeitig, wenn am Gegenstand Beschädigungen oder Veränderungen aufgetreten sind, die Einfluss auf dessen messtechnische Eigenschaften haben können oder wenn das aufgebrachte Stempelzeichen beschädigt oder entfernt wird.

Ende der Anlage
End of the addendum

Mess- und Eichwesen Niedersachsen, Goethestraße 44, 30169 Hannover Telefon (0511) 1266220 Fax (0511) 1266300

A.7.1 Calibration Facility / Fa. ABB Göttingen (Germany)

A.7.2 Test protocols

Calibration Facility: ABB Göttingen, PTB-tested / Test Stand PS 0014
Pipe ID : 306 mm / Medium : Water

Type Test	Operating temperature	Time sec	m³ /h	Test m³	Test Norm m³	Error %
IBF-26	20°C	100	1000	27,632	27,594	0,1388
IBF-26	20°C	100	1000	27,616	27,615	0,0035
IBF-26	20°C	100	1000	27,662	27,652	0,0345
IBF-26	20°C	100	1000	27,563	27,555	0,0284
IBF-26	20°C	100	1000	27,598	27,608	0,0395
IBF-26	20°C	100	1000	27,599	27,547	0,1882
Average		100		27,612	27,595	0,0721

Type Test	Operating temperature	Time sec	m³ /h	Test m³	Test Norm m³	Error %
IBF-36	20°C	100	1000	27,613	27,564	0,1807
IBF-36	20°C	100	1000	27,520	27,489	0,1125
IBF-36	20°C	100	1000	27,614	27,576	0,1400
IBF-36	20°C	100	1000	27,644	27,546	0,3531
IBF-36	20°C	100	1000	27,580	27,577	0,0130
IBF-36	20°C	100	1000	27,697	27,505	0,6983
Average		100		27,611	27,543	0,2496

Type Test	Operating temperature	Time sec	m³ /h	Test m³	Test Norm m³	Error %
IBF-66	20°C	100	1000	27,499	27,432	0,2464
IBF-66	20°C	100	1000	27,451	27,425	0,0933
IBF-66	20°C	100	1000	27,436	27,457	-0,0774
IBF-66	20°C	100	1000	27,503	27,495	0,0274
IBF-66	20°C	100	1000	27,448	27,453	-0,0164
IBF-66	20°C	100	1000	27,618	27,569	0,1793
Average		100		27,493	27,472	0,0754

Calibration Facility: ABB Göttingen, PTB-tested / Test Stand PS 0014
Pipe ID : 400 mm / Medium : Water

Type Test	Operating temperature	Time sec	m³ /h	Test m³	Test Norm m³	Error %
IBF-26	9°C	100	2000	55,840	55,908	-0,1209
IBF-26	9°C	100	2000	55,635	55,788	-0,2743
IBF-26	9°C	100	2000	55,975	56,016	-0,0724
IBF-26	9°C	100	2000	55,909	56,001	-0,1648
IBF-26	9°C	100	2000	55,775	55,815	-0,0726
IBF-26	9°C	100	2000	55,673	55,779	-0,1914
Average		100		55,801	55,884	-0,1493

Type Test	Operating temperature	Time sec	m³ /h	Test m³	Test Norm m³	Error %
IBF-36	3°C	100	2000	56,205	56,141	0,1135
IBF-36	3°C	100	2000	56,034	56,068	-0,0618
IBF-36	3°C	100	2000	56,050	56,028	0,0391
IBF-36	3°C	100	2000	56,197	56,260	-0,1111
IBF-36	3°C	100	2000	56,256	56,254	0,0039
IBF-36	3°C	100	2000	56,202	56,209	-0,0127
Average		100		56,157	56,160	-0,0048

Type Test	Operating temperature	Time sec	m³ /h	Test m³	Test Norm m³	Error %
IBF-66	3°C	100	2000	55,622	55,641	-0,0337
IBF-66	3°C	100	2000	55,657	55,659	-0,0022
IBF-66	3°C	100	2000	55,713	55,644	0,1240
IBF-66	3°C	100	2000	55,505	55,583	-0,1405
IBF-66	3°C	100	2000	55,625	55,485	0,2523
IBF-66	3°C	100	2000	55,373	55,499	-0,2272
Average		100		55,583	55,585	-0,0045

Calibration Facility: ABB Göttingen, PTB-tested / Test Stand PS 0014
Pipe ID : 499 mm / Medium : Water

Type Test	Operating temperature	Time sec	m³ /h	Test m³	Test Norm m³	Error %
IBF-26	8,2°C	100	3000	83,285	83,387	-0,1220
IBF-26	8,2°C	100	3000	83,443	83,831	-0,4628
IBF-26	8,2°C	100	3000	83,196	83,369	-0,2071
IBF-26	8,2°C	100	3000	83,323	83,543	-0,2684
IBF-26	8,2°C	100	3000	83,138	83,358	-0,2684
IBF-26	8,2°C	100	3000	83,012	83,358	-0,4155
Average		100		83,233	83,475	-0,2899

Type Test	Operating temperature	Time sec	m³ /h	Test m³	Test Norm m³	Error %
IBF-36	8,2°C	100	3000	83,297	83,333	-0,0422
IBF-36	8,2°C	100	3000	83,170	83,130	0,0484
IBF-36	8,2°C	100	3000	83,723	83,097	-0,4502
IBF-36	8,2°C	100	3000	83,116	83,109	0,0079
IBF-36	8,2°C	100	3000	83,253	83,221	0,0375
IBF-36	8,2°C	100	3000	83,074	83,164	-0,1080
Average		100		83,105	83,176	-0,0844

Type Test	Operating temperature	Time sec	m³ /h	Test m³	Test Norm m³	Error %
IBF-66	7,0°C	100	3000	83,512	83,602	-0,7078
IBF-66	7,0°C	100	3000	83,482	83,629	-0,1754
IBF-66	7,0°C	100	3000	83,802	83,830	-0,0330
IBF-66	7,0°C	100	3000	83,696	83,636	0,0715
IBF-66	7,0°C	100	3000	83,596	83,760	-0,1957
IBF-66	7,0°C	100	3000	83,683	83,701	-0,0219
Average		100		83,629	83,693	-0,0770

Calibration Facility: ABB Göttingen, PTB-tested / Test Stand PS 0014
Pipe ID : 599 mm / Medium : Water

Type Test	Operating temperature	Time sec	m³ /h	Test m³	Test Norm m³	Error %
IBF-26	6,0°C	100	4000	110,96	111,03	-0,0597
IBF-26	6,0°C	100	4000	110,93	111,10	-0,1550
IBF-26	6,0°C	100	4000	111,13	111,18	-0,0431
IBF-26	6,0°C	100	4000	110,86	111,08	-0,1973
IBF-26	6,0°C	100	4000	110,98	111,07	-0,0833
IBF-26	6,0°C	100	4000	111,09	111,12	-0,0208
Average		100		110,99	111,10	-0,0932

Type Test	Operating temperature	Time sec	m³ /h	Test m³	Test Norm m³	Error %
IBF-36	2,4°C	100	4000	110,45	110,33	0,1116
IBF-36	2,4°C	100	4000	110,44	110,26	0,1615
IBF-36	2,4°C	100	4000	110,44	110,32	0,1081
IBF-36	2,4°C	100	4000	110,50	110,32	0,1640
IBF-36	2,4°C	100	4000	110,41	110,28	0,1215
IBF-36	2,4°C	100	4000	110,40	110,47	-0,0623
Average		100		110,44	110,33	0,1007

Type Test	Operating temperature	Time sec	m³ /h	Test m³	Test Norm m³	Error %
IBF-66	5,0°C	100	4000	110,97	111,05	-0,0760
IBF-66	5,0°C	100	4000	110,68	110,90	-0,2060
IBF-66	5,0°C	100	4000	110,87	111,01	-0,1260
IBF-66	5,0°C	100	4000	110,65	111,05	-0,3622
IBF-66	5,0°C	100	4000	110,86	111,07	-0,1870
IBF-66	5,0°C	100	4000	111,13	111,09	0,0414
Average		100		110,86	111,03	-0,1526

Calibration Facility: ABB Göttingen, PTB-tested / Test Stand PS 0014
Pipe ID : 999 mm / Medium : Water

Type Test	Operating temperature	Time sec	m³ /h	Test m³	Test Norm m³	Error %
IBF-26	12,5°C	100	5000	139,99	140,14	-0,1067
IBF-26	12,5°C	100	5000	139,96	140,12	-0,1144
IBF-26	12,5°C	100	5000	139,82	139,92	-0,0685
IBF-26	12,5°C	100	5000	139,79	139,99	-0,1409
IBF-26	12,5°C	100	5000	139,51	139,78	-0,1954
IBF-26	12,5°C	100	5000	139,77	139,86	-0,0617
Average		100		139,81	139,97	-0,1146

Type Test	Operating temperature	Time sec	m³ /h	Test m³	Test Norm m³	Error %
IBF-36	16,5°C	100	5000	138,02	137,75	0,1985
IBF-36	16,5°C	100	5000	138,36	138,51	-0,1087
IBF-36	16,5°C	100	5000	138,72	139,09	-0,2662
IBF-36	16,5°C	100	5000	139,54	139,37	0,1195
IBF-36	16,5°C	100	5000	138,92	139,56	-0,4613
IBF-36	16,5°C	100	5000	139,66	139,68	-0,0181
Average		100		138,87	138,99	-0,0899

Type Test	Operating temperature	Time sec	m³ /h	Test m³	Test Norm m³	Error %
IBF-66	13,5°C	100	5000	138,32	138,70	-0,2685
IBF-66	13,5°C	100	5000	138,41	138,65	-0,1771
IBF-66	13,5°C	100	5000	139,11	138,69	0,3033
IBF-66	13,5°C	100	5000	138,86	138,63	0,1674
IBF-66	13,5°C	100	5000	139,10	138,60	0,3640
IBF-66	13,5°C	100	5000	138,50	138,78	-0,2013
Average		100		138,72	138,68	0,0313

Calibration Facility: ABB Göttingen, PTB-tested / Test Stand PS 0014
Pipe ID : 1608 mm / Medium : Water

Type Test	Operating temperature	Time sec	m³ /h	Test m³	Test Norm m³	Error %
IBF-26	12,5°C	100	5500	153,47	153,21	0,1698
IBF-26	12,5°C	100	5500	153,99	153,14	0,5586
IBF-26	12,5°C	100	5500	153,60	153,20	0,2594
IBF-26	12,5°C	100	5500	153,63	153,25	0,2465
IBF-26	12,5°C	100	5500	153,88	153,30	0,3813
IBF-26	12,5°C	100	5500	153,32	153,18	0,0879
Average		100		153,65	153,21	0,2839

Type Test	Operating temperature	Time sec	m³ /h	Test m³	Test Norm m³	Error %
IBF-36	11,5°C	100	5500	154,61	154,45	0,1015
IBF-36	11,5°C	100	5500	153,68	154,28	-0,3892
IBF-36	11,5°C	100	5500	154,23	154,22	0,0042
IBF-36	11,5°C	100	5500	154,28	154,26	0,0130
IBF-36	11,5°C	100	5500	153,49	154,33	-0,5445
IBF-36	11,5°C	100	5500	154,16	154,69	-0,3376
Average		100		154,08	154,37	-0,1922

Type Test	Operating temperature	Time sec	m³ /h	Test m³	Test Norm m³	Error %
IBF-66	11,5°C	100	5500	152,45	152,02	0,2856
IBF-66	11,5°C	100	5500	151,83	151,84	-0,0073
IBF-66	11,5°C	100	5500	152,35	151,95	0,2642
IBF-66	11,5°C	100	5500	152,13	151,94	0,1247
IBF-66	11,5°C	100	5500	152,36	152,03	0,2180
IBF-66	11,5°C	100	5500	152,49	151,86	0,4153
Average		100		152,27	151,94	0,2168

A.7.3 Documentation

a.) Available Certificates / Approvals:

The following tables shows the currently valid approvals and test certificates :

Sensor Type	Test Method	Result	Approval/Test Agency	Location	Date of Test
IBF-100	Sample design test to TA Luft 1986, 13. BImSchV und 17. BImSchV	Test passed	TÜV Rheinland Sicherheit und Umweltschutz GmbH	D-Köln	12.5.1999
IBF-20	Measurement accuracy	±0,5% of rate for all measured values	NMI Nederlands Meetinstituut	NL-Dordrecht	24.3.2000
IBF-25	Measurement accuracy	±0,68% of rate for all measured values	PIGSAR Ruhrgas AG (Staatl. anerkannt)	D-Dorsten	24.11.1999
IBF-25/26	Sample design test to TA Luft 1986, 13. BImSchV und 17. BImSchV	Test passed	TÜV Rheinland Sicherheit und Umweltschutz GmbH	D-Köln	12.5.1999
IBF-35/36	Sample design test to TA Luft 1986, 13. BImSchV und 17. BImSchV	Test passed	TÜV Rheinland Sicherheit und Umweltschutz GmbH	D-Köln	12.5.1999
IBFD-26-HTG	Test according to TRD 110 and TRD 110 Anlage 1	Test passed	VdTÜV	D-Essen	7.12.1995
IBR-25/26	Sample design test to TA Luft 1986, 13. BImSchV und 17. BImSchV	Test passed	TÜV Rheinland Sicherheit und Umweltschutz GmbH	D-Köln	12.5.1999
IBR-35/36	Sample design test to TA Luft 1986, 13. BImSchV und 17. BImSchV	Test passed	TÜV Rheinland Sicherheit und Umweltschutz GmbH	D-Köln	12.5.1999

b.) Ordering Codes for Documentation

General Documentation	
Code	**Description**
D001	Certificate of Conformance
D003	Special Product Drawing
D004	Certificate of Origin
D005	Certificate of Origin by German Chamber of Commerce
D006	Legalized by Embassy of Recipient
D007	Standard QA-Plan
D008	Inspection Certificate
D009	QA-Manual
D009a	Calibration Certificate
D009b	Legalized by Embassy of Origin
D009c	Documents on CD

Manufacturing Process Covering Documents	
Code	**Description**
D010	Manufacturing Schedule
D011	Manufacturing Progress Status Report
D012	Test Procedures (Covering Manufacturing)
D013	Welding Procedures (WPS, PQR), Standard Material
D014	Welding Procedures (WPS, PQR), Special Material

Material Certificates	
Code	**Description**
D015	Material Certificate (EN10204 2.2)
D016	Material Certificate (EN10204 3.1) for series IBF and IBR
D017	Material Certificate (EN10204 3.1) for all other series
D018	Material Certificate (EN10204 3.2 or 3.3)

Inspection & Testing	
Code	**Description**
D023	Hydraulic Pressure Test incl. Test Certificate
D024	Construction- and Pressure Test acc. to Pressure Vessel Guidelines by TÜV, incl. Material Certificate (EN10204 3.1)
D025	Construction- and Pressure Test acc. to AD-procedure, TRB and TRC by TÜV, incl. Material Certificate (EN10204 3.1)
D026	X-Ray-Testing for Welding Seams as per DIN 54111 or ASME Sec. VIII
D027	Dye Penetrant Testing for Welding Seams as per DIN 54152 or ASME Sec. VIII
D028	Hardness Test acc. to NACE MR01-75, incl. NACE-Conformity Certificate (only with material certificate EN 10204 3.1)
D029	Weight Certificate
D030	Error Check (PMI-Check)
D031	Certificate about Ferrite Particles in Welding Seam

A.8 Accessories for Itabar®-Flow-Sensors

A.8.1 Shut-off devices for the pressure pipes

Fig. 20: Ball Valve
PN 40 (580 psi); 1.4401 (316SS)
(A56)

Fig. 21: Needle valve ½" NPT,
PN400 (5801 psi; 1.4401 (316SS
(A62)

Fig. 22: 3-way-manifold
PN 400 (5801 psi); 1.4401 (316SS)
(A66)

Fig.: 23: 5-way-manifold
1.4401 (316SS)
(A71)

Fig. 24: Shut-Off-Valve
PTFE
(A63)

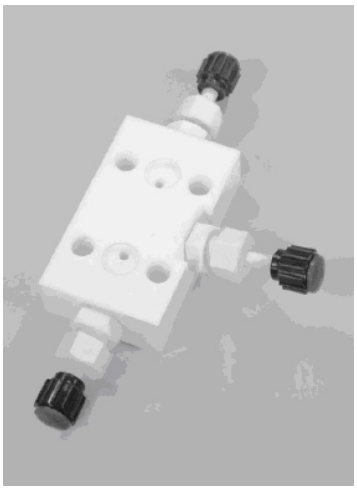

Fig. 25: 3-way-manifold
PTFE
(A67)

A.8.2 Signal Transmitters

a.) Δp Transmitter INT-433

Itabar®-Flow-Sensors in general can be operated with each Δp-transmitter on the market. Intra-Automation recommends its standard transmitter INT-433.

Fig 26: Δp-Transmitter INT-433

Application:

Various versions of the transmitter INT, DS III series, are available with a two-wire circuit. The output-signal is a load-independent direct current of 4 to 20 mA linearly proportional to the input pressure.

Transmitters conforming to the type of protection „intrinsic safety“ and „explosion proof” may be installed within potentially explosive atmospheres (zone1) or zone 0. The transmitters are provided with an EU prototype test certificate and comply with the corresponding harmonized European standards of the CENELEC.

Transmitters with the type of protection „intrinsic safety“ for use in zone 0 may be operated with power supply units of category “ia” and “ib”.

The transmitters can be equipped with various designs of remote seals for special applications such as the measurement of highly viscous substances.

The transmitter can be programmed locally by using three input keys or externally via HART. The following table describes the fundamental parameters. Further parameters for special applications are accessible via HART.

Elements for parametrizing the transmitter:

Parameterization using	Input keys	HART-communication
Start-of-scale value	●	●
Full-scale value	●	●
Electric Damping	●	●
Start-of-scale value without application of a pressure (blind setting)	●	●
Full-scale value without application of a pressure (blind setting)	●	●
Zero-adjustment (correction of position)	●	●
Current transmitter	●	●
Fault current	●	●
Disabling of keys, write protection	●	●[1])
Type of dimension, actual dimension	●	●
Characteristic (linear, square-rooted)	●[2])	●[2])
Diagnostics - Event counter - Slave pointer - Maintenance timer - Simulation functions		●

[1]) Cancel apart from write protection
[2]) Only differential pressure

● possible

Transmitter for differential pressure and flow:

This type of transmitter is used to measure

- the differential pressure.
- a small positive or negative pressure
- the flow q ~ $\sqrt{dp}$ (together with a primary differential pressure device)

Spans are possible from 1 mbar to 30 bar.

Pressure limit of medium for differential pressure and flow transmitters	
Span	**Upper pressure limit of medium (nominal pressure) PN (INT-433)**
1,0 to 20 mbar	32
1,0 to 30 mbar	160
2,5 to 250 mbar	160
6,0 to 600 mbar	160
16,0 to 1.600 mbar	160
50,0 to 5.000 mbar	160
300,0 to 30.000 mbar	160

Technical Data:

Input:	
Measured variable:	Differential pressure and flow
Measuring range:	
Span (continuously adjustable)	
- nominal pressure PN 32	1 mbar to 20 mbar
- nominal pressure PN 160	1 mbar to 30 bar
- nominal pressure PN 420	2,5 mbar to 30 bar
Lower measuring limit:	
- Measuring cell with silicone oil filling	-100 % of max. span or 30 mbar (absolute)
Accuracy:	
Reference conditions:	Increasing characteristic, start-of-scale value 0 bar, stainless steel seal diaphragm, silicone oil filling and room temperature (25 °C) r = max. span/set span = span ratio
Error in measurement with fixed-point setting (including histersis and repeatability)	
- <u>linear characteristic:</u>	
$r \leq 10$	
$10 < r \leq 30$	
$30 < t \leq 100$	$\leq$ (0,005 * r + 0,05 %)
- <u>square-root characteristic:</u>	
Flow > 50 %	$\leq$ 0,1 % @ $r \leq 10$
	$\leq$ 0,2 % @ $10 < r \leq 30$
Flow 25 to 50 %	$\leq$ 0,2 % @ $r \leq 10$
	$\leq$ 0,4 % @ $10 < r \leq 30$
- Repeatability:	included in error in measurement
- Histeresis:	included in error in measurement
- Response time: (T_{63}, without electric damping)	Approx. 0,2 s, approx. 0,3 s within 20 and 60 mbar-Measuring cell
- Long-term drift per 12 months:	$\leq$ (0,1 * r) %
Medium conditions:	
<u>Process temperature:</u>	
- Measuring cell with silicone oil filling:	-40 to +100 °C
30-bar-measuring cell	-40 to +85 °C
- Measuring cell with inert filling liquid	-20 to +100 °C
30-bar-measuring cell	-20 to +85 °C
process temperature limits:	See process temperature
<u>Process pressure limits:</u>	Nominal pressure (PN)

Ordering Information:

Code	Description
INT-433	**Transmitter for differential pressure and flow, two wire system, Series DS III, PN32/160**

Code	Measuring cell filling	Measuring cell cleaning
1	Silicone oil	normal
3	Inert filling liquid	grease-free

Code	Span (@ PN32/160)
B	1 to 20 mbar
C	1 to 60 mbar
D	2,5 to 250 mbar
E	6 to 600 mbar
F	16 to 1.600 mbar
G	50 to 5.000 mbar
H	300 to 30.000 mbar

Wetted parts material (process flanges made of stainless steel)

Code	Seal diaphragm	Measuring cell parts
A	Stainless steel	Stainless steel
B	Hastelloy	Stainless steel
C	Hastelloy	Hastelloy
E	Tantalum	Tantalum
H	Monel	Monel
L	Gold	Gold
Y	Design for remote seals	

Process connection

Female thread ¼-18 NPT and flange connection acc. to DIN 19 213

Code	Sealing screws opposite process connection
0	Mounting thread M10
2	Mounting thread 7/16-20 UNF
	Sealing screw at side on process flange
4	Mounting thread M10
6	Mounting thread 7/16-20 UNF

Code	Non-wetted parts material	
	Process flange screw	Electronic housing
2	Stainless steel	Die-cast aluminium
3	Stainless steel	Stainless steel precision casting

Code	Design for remote seals
1	Standard version
2	International version (available soon) English label inscriptions, documentation in 5 languages on CD-ROM

Code	Explosion protection
A	Without explosion protection
B	“Intrinsic safe“ (EExia)
D	„explosion-proof“ (EExd)
P	“Intrinsic safe“ and „explosion proof“ EExia+EExd) (planned)
E	Use in Zone 2 (planned)
NC	intrinsic safe + explosion proof (is+xp)

Code	Electric connection / cable inlet
A	screwed PG 13,5
B	Female thread M20x1,5
C	Female thread ½-14 NPT
D	Han 7D plug

Code	Indicator
1	without indicator
6	with indication, setting: mA
7	with indication, setting as specified

INT-433										-	Z...

(see next page)

Description	Code
Transmitter with mounting bracket made of	
- Steel	**A01**
- Stainless steel	**A02**
Instead of FPM (Viton®*), process flange O-ring	
- PTFE	**A20**
- FEP (with silicone core, approved for food)	**A21**
- FFPM (Kalrez®*)	**A22**
- NBR (Buna N)	**A23**
Han 7D (metal, grey)-plug	**A30**
Han 8U plug (instead of Han 7D)	**A31**
Sealing screws (1/4-18NPT) with valve in material of process flange	**A40**
Rating plate inscription (instead of German)	
- English	**B11**
- French	**B12**
- Spanish	**B13**
- Italian	**B14**
Rating plate inscription in English, pressure units in H_2O resp. psi	**B21**
Manufacturer's test certificate M acc. to DIN 55350, part 18 and acc. to ISO 8402	**C11**
Acceptance test certificate B acc. to DIN 50049 / EN 10204 3.1 B	**C12**
Factory certificate acc. to DIN 50049-2.2 / EN 10204 2.2	**C14**
Certificate for use in safety plants acc. to IEC 61508	**C20**
Setting of upper limit of output signal to 22,0 mA	**D05**
Acid gas version acc. to NACE (Only together with seal diaphragm made of Hastelloy and process screws made of stainless steel).	**D07**
IP 68 (not together with Han 7D/Han 8U plug and PG13,5 screwed gland)	**D12**
with one pressure cover for chemical seal	**D19**
with two pressure cover for chemical seal	**D20**
For use in Zone 20/21	**E01**
For use in Zone 0 (basic unit EEx ia)	**E02**
Over-filling safety device for flammable and non-flammable liquids (max. PN 32), (basic unti EEx ia) (planned)	**E08**
Oxygen application (max. 160 bar with oxygen measurement and inert filling liquid)	**E10**
Interchanging of process connection side (high pressure side: left; low pressure side: right)	**H01**
Vent on side for gas measurement	**H02**
Stainless steel process flanges for vertical differential pressure (not together with K01 or K02)	**H03**
Process flanges made of:	
- Hastelloy	**K01**
- Monel	**K02**
Measuring range to be set,m specify in plain text: - with linearer characteristic: Y01: ...to ... mbar, bar, kPa, MPa,.....	**Y01**
- with square root characteristic Y02: 0 to ... mbar, bar, kPa, MPa,.....	**Y02**
Measuring point number / identification (max. 16 characters) specify in plain text Y15: …….....	**Y15**
Measuring point text (max. 27 characters) specify in plain text Y16:	**Y16**
Setting for digital display, specify in plain text Y21: mbar, bar, kPa, MPa,....	**Y21**
Setting for digital displays in non-pressure units, specify in plain text (measuring range in pressure units (**Y01** or **Y02**) mandatory) Y22: ... to .... l/min, m³/h, m, ...	**Y22 + Y01 or Y02**

Y22 not together with E08
Only the settings for Y01; Y02, Y21, Y22 and D05 can be made in the factory.
**Viton® and Kalrez® are trademarks of DuPont Performance Elastomer LLC.*

b.) Multivariable Transmitter Type: 267 CS

Signal transmitters for mass-flow-measurement – also known as multivariable Δp transmitters – serve to measure the density-compensated flow of gases, steam and liquids. Such transmitters (Fig. 27) allow a compact modular construction with pitot tubes as the flow sensing instrument (Fig. 28).

In conditions of changing operating temperatures and pressures the resulting operation density of a process fluid can vary over a wide range. As an example: a pressure- and temperature-change of only 2 % can result in a 1% change of the mass flow value.

While a direct measurement of a fluid's density is possible in principle, it is often too cumbersome to accomplish.
In most cases it is easier to measure the operating temperature and pressure and include these values in mass flow calculations. With information about volumetric flow, operating temperature and operating pressure mass flow can be calculated as follows:

- Information about the volumetric flow value is derived from a pressure difference generated at the pitot tube flow sensor. This differential pressure (Δp) is measured with a differential pressure sensor, which is a built-in component of the transmitter.
- Information about the fluid operating pressure is measured by a separate absolute pressure sensor inside the same transmitter. There is an electrical connection between the Δp and absolute pressure sensor inside the transmitter. No wiring is required.
- The fluid operating temperature can be measured by means of either a RTD built into the flow sensor or a temperature sensor mounted separately. In both cases connection wiring has to be done.

Mass flow is calculated from volumetric flow and fluid density. The aggregate condition if a fluid is important:

- To calculate the densities of liquids a polynomial is used with operating temperature as its process variable.
- For calculation of steam density an equation with operating temperature as its process variable is applied.
- To calculate the density of gases gas laws are applied, taking into consideration both operating temperature as well as operating pressure.

Fig. 27 Transmitter for volumetric flow, fluid temperature and pressure measurement as well as calculation of mass flow value

Fig 28 Compact sensor with multivariable transmitter

For a number of commonly measured fluids the functional relationships between density and operation temperature as well as operating pressure are stored in the transmitter's memory. Mass flow of other fluids can be measured by programming the appropriate density-temperature-pressure relations into the transmitter.

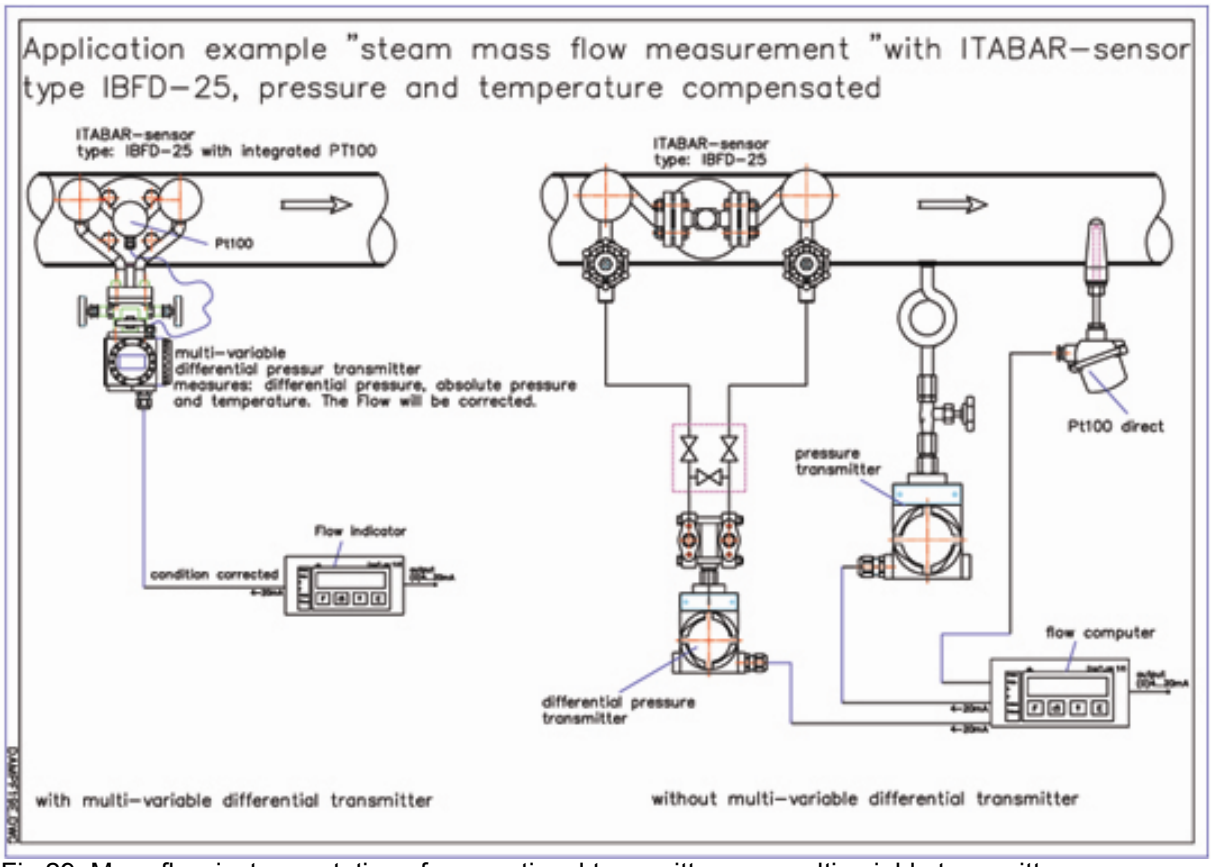

Fig 29: Mass flow instrumentation of conventional transmitters vs. multivariable transmitters

Fig 29 illustrated two possible instrumentation arrangements for steam mass flow measurement. The advantages of the multivariable transmitter arrangement are:

- simple and cost-saving installation
- pipe line only has to be tapped at one place
- quick installation and removal from the process
- no need to cut the pipe
- replacement of RTD is possible under pressure
- no additional installation and wiring procedures for pressure and temperature sensors
- no need for additional corrective temperature/pressure calculators

Ordering Information:

Code	Description			
267CS	Multivariable Transmitter for Mass Flow / Base Accuracy: 0,075 %			
	Sensor Span Limits			
A	0,05…1 kPa	0,5…10 mbar	0,2…4” H2O	
C	0,2…6 kPa	0,8…24 mbar	0,8…24” H2O	
F	0,4…40 kPa	4…400 mbar	1,6…160” H2O	
L	2,5…250 kPa	25…2500 mbar	10…1000” H2O	
N	20…2000 kPa	0,2…20 bar	209…290 psi	
	Static Pressure Range			
1	0…0,6 MPa	0…6 bar	0…87 psi	1)
2	0…2 MPa	0…20 bar	0…290 psi	2)
3	0…10 MPa	0…100 bar	0…1450 psi	2)
4	0…41 MPa	0…410 bar	0…5945 psi	2)
	Diaphragm Material / Fill Fluid (wetted parts)			
S	AISI 316L	Silicone oil	NACE	
K	Hastelloy C276	Silicone oil	NACE	
M	Monel 400	Silicone oil	NACE	
V	Monel 400, gold plated	Silicone oil	NACE	
T	Tantalum	Silicone oil	NACE	
A	AISI 316L ss	Inert fluid	NACE	3)
F	Hastelloy C276	Inert fluid	NACE	3)
C	Monel 400	Inert fluid	NACE	3)
Y	Monel 400, gold plated	Inert fluid	NACE	3)
D	Tantalum	Inert fluid	NACE	3)
	Process Flanges/Adapters Material and Connection (wetted parts) / horizontal			
A	AISI 316L	¼-18” NPT-F direct (7/16” UNF U.S. drilling)		NACE
C	AISI 316L	¼-18” NPT-F direct (DIN 19213)		NACE
B	AISI 316L	½-14” NPT-F through adapter (7/16” UNF U.S. drilling)		NACE
D	Hastelloy C276	¼-18” NPT-F direct (7/16” UNF U.S. drilling)		NACE
E	Hastelloy C276	½-14” NPT-F through adapter		NACE
F	Hastelloy C276	¼-18” NPT-F direct (DIN 19213)		NACE
G	Monel 400	¼-18” NPT-F direct (7/16” UNF U.S. drilling)		NACE
L	Monel 400	¼-18” NPT-F direct (DIN 19213)		NACE
H	Monel 400	½-14” NPT-F through adapter (7/16” UNF U.S. drilling)		NACE
P	Kynar (PVDF)	¼-18” NPT-F direct (7/16” UNF U.S. drilling)		NACE

	Bolts/Gaskets (wetted parts)				
3	Stainless steel	NACE	Viton	NACE	3)
4	Stainless steel	NACE	PTFE	NACE	
5	Stainless steel	NACE	EPDM	NACE	
6	Stainless steel		Perbunan		

	Housing material and electrical connection			
A	Alum.	(barrel ver.)	½”-14 NPT	
B	Alum.	(barrel ver.)	M20x1.5	NV; FM; CSA
E	Alum.	(barrel ver.)	Harting HAN-connector	NV; ATEX EExd, FM; CSA 4)
G	Alum.	(barrel ver.)	Fieldbus-connector	NV; ATEX EExd, FM; CSA 4)
S	SS	(barrel ver.)	½”-14 NPT	
T	SS	(barrel ver.)	M20x1.5	NV; FM; CSA
J	Alum.	(DIN-type)	M20x1.5	NV; FM; CSA
K	Alum.	(DIN-type)	Harting HAN-connector	NV; ATEX EExd, FM; CSA 4)
W	Alum.	(DIN-type)	Fieldbus-connector	NV; ATEX EExd, FM; CSA 4)

	Output / Additional options (to be ordered by “Additional Ordering Code”		
H	4…20 mA HART	no additional options	5, 6)
1	4…20 mA HART	options requested	5)
P	PROFIBUS PA	no additional options	5, 6)
2	PROFIBUS PA	options requested	5)
F	Foundation-Fieldbus	no additional options	5, 6)
3	Foundation-Fieldbus	options requested	5)
M	Modbus RS485	no additional options	5, 6)
5	Modbus RS485	options requested	5, 6)
N	Modbus RS232	no additional options	5, 6)
6	Modbus RS232	options requested	5, 6)

267CS							

Additional Ordering Code 267CS:

Drain / Vent (material and position) (wetted parts)				
V1	AISI 316L	on process axis	NACE	7)
V2	AISI 316L	on flange side top	NACE	7)
V3	AISI 316L	on flange side bottom	NACE	7)
V4	Hastelloy C276	on process axis	NACE	8)
V5	Hastelloy C276	on flange side top	NACE	8)
V6	Hastelloy C276	on flange side bottom	NACE	8)
V7	Monel 400	on process axis	NACE	9)
V8	Monel 400	on flange side top	NACE	9)
V9	Monel 400	on flange side bottom	NACE	9)
Electrical Certification				
E1	ATEX Group II Category 1/2 GD – intrinsic safety EEx ia			
E2	ATEX Group II Category 1/2 G – flameproof EEx d			
E3	ATEX Group II Category 3 GD – type of protection N EEx nL, design compliance			
EA	Factory Mutual (FM) – Intrinsically Safe			
EB	Factory Mutual (FM) – Explosion Proof (only with ½" NPT electr. conn. and SS label)			
ED	Canadian Standard Association – Intrinsically Safe			
EE	Canadian Standard Association – Explosion Proof			
Integral LCD				
L1	Digital LCD integral display			
L2	Backlit digital LCD integral display			
Mounting Brackets (shape and material)				
B2	for pipe mounting AISI 316L (1.4404)			
B4	for wall mounting AISI 316L (1.4404)			
Labels & TAG Language				
T1	German / SS (not available with DIN Electronic housing code J, K, W)			
TA	German and English / Plastics (not suitable for Factory Mutual – Explosion Proof)			
Additional TAG-plate				
I1	SS			
Preparation Procedure				
P1	Oxygen Service Cleaning (only with Inert fill; P_{max}=12MPa/120bar/1740psi; T_{max}=60°C/140°F)			
P2	Hydrogen Service Preparation			
Certificates				
C1	Inspection certificate EN10204-3.1B of calibration			
C3	Inspection certificate EN10204-3.1B of the cleanliness stage acc. DIN 25 410			
C4	Inspection certificate EN10204-3.1B of helium leakage test of the sensor module			
C5	Inspection certificate EN10204-3.1B of the pressure test			
C6	Certificate of Compliance 2.1 of the housing design EN 10204			
Material traceability				
H1	Certificate of Compliance with the order EN 10204-2.1 of the instrument design			
H3	Inspection certificate EN10204-3.1B of pressure retaining and process wetted parts			
H4	Test report EN 10204-2.2 of the pressure bearing and process wetted parts			
Connector				
U1	Fieldbus 7/8 (only for FOUNDATION Fieldbus, without adapter)			6, 10)
U2	Fieldbus M12x1 (only for PROFIBUS PA, without adapter)			6, 10)
U3	Harting HAN 8U, straight entry			5, 11)
U4	Harting HAN 8U, angle entry			5, 11)

Footnotes:

1) not available with sensor code C, F, L, N
2) not available with sensor code A
3) suitable for oxygen service
4) select type in "Additional Order Codes"
5) not available with Electronic Housing code G and W
6) not available with Electronic Housing code E and K
7) not available with Process Flanges/Adapters – Code D, E, F, H, L, P
8) not available with Process Flanges/Adapters – Code A, B, C, G, H, L, P
9) not available with Process Flanges/Adapters – Code A, B, C, D, E, F, P
10) not available with Electronic Housing code T, S, A, B, J
11) not available with Electronic Housing code T, S, A, B, J, K

A.8.3 Resistance Thermometer (RTD) – PT-100 / R/I-Transmitter

a) Resistance Thermometer (RTD) – PT-100

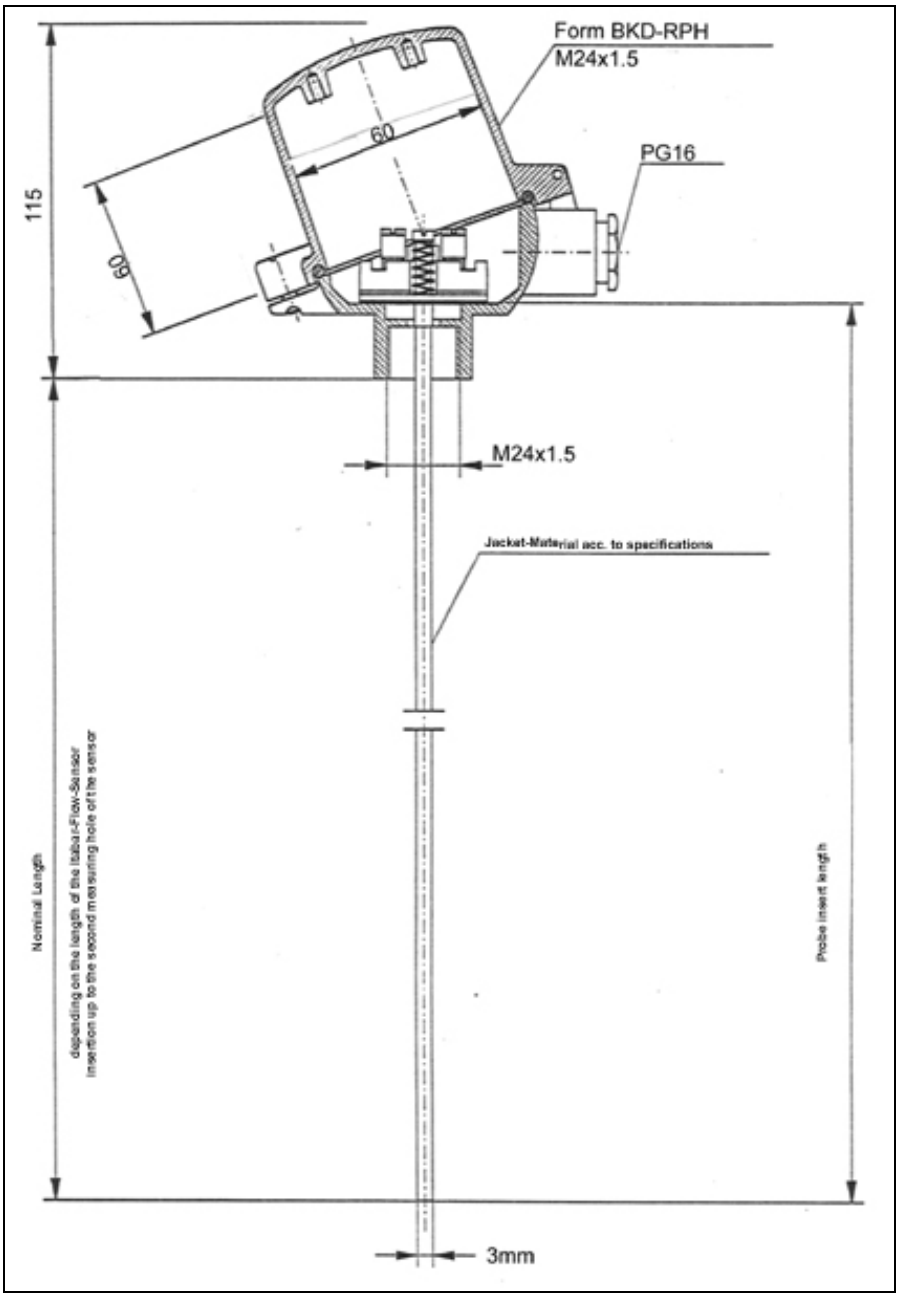

Fig 30: RTD – 100 Ω Platinum

Technical Data:

Temperature Limits °C [°F]	
Sensors 1/16 to 1/8”	EExi, EExd 1/16 to 1/8” (explosion proof)
-200…+550 [-328…+1022]	-200…+500 [-328…+932]

Accuracy

class A	±(0,15+0,002 ltl)
class B	±(0,3+0,002 ltl)
class 1/2 DIN	±(0,15+0,002 ltl)
class 1/3 DIN	±(0,1+0,002 ltl)

Measuring sensor coating
The sensors (resistance thermometer and thermocouples) are coated with a compressed MgO-powder and are protected by metal jackets (protective tube). The jacket is non porous and can be bent up to a defined radius.
Important: only bend the jacket at 2“ off the tip of the sensor.

Terminal
The terminal, material ceramic, is fixed with two M4- spring screws (up to 0.4“ play) onto the connection head. The screws diameter and distance are according to the head types A and B.

Typical resistance values for the sensor +16 °C [+60 °F] up to 35 °C [+95 °F] (for length of cable)
Diameter 1/8”: ~ 0,28 Ω/m [0,085 Ω/ft]

Insulation resistance at +16 °C [+60 °F] up to 35 °C [+95 °F] (acc. IEC 751)
≥100 MΩ with U ≤100 VDC

Sensitive length of the sensor
For resistance thermometers: max. 1 ½” for all sensor diameters.

Response time without protective tube
The values are for the sensors without protective tube. The response time is the time delay, with which the sensor output corresponds to a change in temperature.
t 0,5 necessary time until the temperature change indication reaches 50% of its total value.
t 0,9 necessary time until the temperature change indication reaches 90% of its total value.

	Water		Air	
Sensor	~ 0,65 ft/s		~ 3,3 ft/s	
	t 0,5	t 0,9	t 0,5	t 0,9
WT 1/8” ⌒	1,6 s	5,5 s	25 s	86 s

Response time for sensors integrated into Itabar®-Flow-Sensors
The values are for sensor integrated into ITABAR® flow sensors. The response time is the time delay, with which the sensor output corresponds to a change in temperature.
t 0,5 necessary time until the temperature change indication reaches 50% of its total value.
t 0,9 necessary time until the temperature change indication reaches 90% of its total value.

	Water		Air	
Sensor	~ 0,65 ft/s		~ 3,3 ft/s	
	t 0,5	t 0,9	t 0,5	t 0,9
WT 1/8” ⌒	2,4 s	8,3 s	37,5 s	129 s

Immersion depth
To avoid measurement errors due to heat conduction and heat radiation, the following depth of immersion are recommended:

Sensor	Liquids	Gas / steam
WT 1/8”	45 mm [1.78”]	55 mm [2.15”]

Vibration resistance
The vibration resistance of these sensors is at least equal to the values described in IEC 751, article 4.42 (30 m/s2), 10-500Hz, at ‚harsh conditions’ during 150 hours in 2 axis.

Sensor for potentially explosive atmosphere
The sensors can be mounted in Zone 1 (class 1 div. 1) or Zone 2 (class 1 div. 2), not in Zone 0. All sensors delivered for usage in this atmosphere are equipped with an identification plate. Please always refer to the technical data if spare parts need to be ordered.

Protection type ‚explosion proof housing' for EExd-version:
The sensor itself cannot comply with this requirement. The system has to be equipped with an explosion proof EExd- connection head with type approved screw gland for the cable and a neck tube with flame blocker according to EN 50018.

Protection type ‚intrinsically safe' for EExi-version:
The sensor is equipped with one or two measuring circuits. These are tested for intrinsic dielectric strength, by applying 500 V AC to the circuits and ground and between the circuits. The identification plate of the sensor displays information for the operation of the sensor within intrinsically safe measurement circuits. The installed devices on the output side are type approved accordingly; power and heat loss are according to EN 50020. The connection head is delivered including a terminal for grounding.

Advantages of RTD
- Excellent long-term stability
- Output signal is temperature-linear
- Good corrosion resistance
- High accuracy

b.) R/I Transmitters for RTD-Signals

The resistance thermometer (RTD) puts out a Ω-signal. For further interpretation this signal has to be converted into a current signal. Depending on the transmitter this can be a 4…20 mA signal, a HART-protocol-signal, a PROFIBUS-PA-signal or a Fieldbus Foundation-signal.

Intra-Automation GmbH has a head-transmitter for each of these applications. To choose the right transmitter for your application, the following information is needed:

Code	Transmitter	Ex-approval	Connection head
0	w/o	---	Form B
1	4…20 mA	w/o	Form BUZH
2	4…20 mA/HART	w/o	Form BUZH
3	Profibus PA	w/o	Form BUZH
4	Foundation Fieldbus	w/o	Special
5	4…20 mA	ATEX EEx ia	Form BUZH
6	4…20 mA/HART	ATEX EEx ia	Form BUZH
7	Profibus PA	ATEX EEx ia	Form BUZH
8	Foundation Fieldbus	ATEX EEx ia	special
Y	others, please specify		

For the different applications, Intra-Automation has the following transmitters taken into it's program:

- INT5333A: 4…20 mA, non-Ex
- INT5333B: 4…20 mA, ATEX EExia
- INT5335A: SMART/HART; non-Ex
- INT5335B: SMART/HART; ATEX EExia
- TMT84: PROFIBUS PA, non-Ex or ATEX EExia
- TMT85: Foundation Fieldbus; no-Ex or ATEX EExia

R/I Head transmitter type INT5333 (4…20 mA)

INT5333
2-wire
programmable
Transmitter

2-WIRE PROGRAMMABLE TRANSMITTER INT5333

- ♦ **RTD or Ohm input**
- ♦ **High measurement accuracy**
- ♦ **3-wire connection**
- ♦ **programmable sensor error value**
- ♦ **for DIN form B sensor head mounting**

Application:
- Linearized temperature measurement with Pt100...Pt1000 or Ni100...Ni1000 sensor
- Conversion of linear resistance variation to a standard analogue current signal, for instance from valves or Ohmic level sensors

Technical characteristics:
- Within a few seconds the user can program INT5333 to measure temperatures within all RTD ranges defined by the norms.
- The RTD and resistance inputs have cable compensation for 2- and 3-wire connection.

Mounting / installation:
- For DIN form B sensor head or DIN rail mounting with a special fitting.

Order information:

Type	Version	
INT5333	Standard EEx	: A : D

R/I Head transmitter type INT5335 (SMART/HART)

INT5335
2-wire programmable Transmitter with HART-Protocol

- ♦ **RTD, TC, Ohm or mV input**
- ♦ **Extremely high measurement accuracy**
- ♦ **HART-Communication**
- ♦ **Galvanic isolation**
- ♦ **for DIN form B sensor head mounting**

Application:
- Linearized temperature measurement with Pt100...Pt1000 or Ni100...Ni1000 or TC sensor.
- Difference or average temperature measurement of 2 RTD or TC sensors.
- Conversion of linear resistance variation to a standard analogue current signal, for instance from valves or Ohmic level sensors.
- Amplification of a bipolar mV signal to a standard 4…20 mA current signal.
- Connection of up to 15 transmitters to a digital 2-wire signal with HART-communication.

Technical characteristics:
- Within a few seconds the user can program INT5335 to measure temperatures within all RTD ranges defined by the norms.
- The RTD and resistance inputs have cable compensation for 2-, 3- and 4-wire connection.
- Continuous check of vital stored data for safety reasons.
- Sensor error detection according to the guidelines in NAMUR NE 89.

Mounting / installation:
- For DIN form B sensor head or DIN rail mounting with a special fitting.

Order information:

Type	Version	
INT5335	Standard EEx	: A : B

R/I Head transmitter type TMT84 (PROFIBUS PA)

Dual-Input Temperature Head Transmitter with PROFIBUS PA communication

Application:

- Temperature head transmitter with 2 input channels and PROFIBUS® PA protocol for the conversion of different input signals into digital output signals
- The iTEMP® TMT84 stands out due to signal reliability, long-term stability, high precision and advanced diagnostics (important in critical processes)
- For the highest level of safety, availability and risk reduction
- Usable for resistance thermometer (RTD), thermocouple (TC), resistance transmitters (Ω) and voltage transmitters (mV)
- DIN B style head transmitter to fit in the smallest connection heads or in remote housings

Technical Characteristics:

Dual-Input Temperature Head Transmitter with PROFIBUS® PA communication.

- Easy and standardized communication via PROFIBUS® PA
- Meets the EMC requirements as per NAMUR NE21and the recommendations of NE89 with regard to temperature transmitters with digital signal processing
- Straightforward design of measuring points in Ex-areas through FISCO/FNICO conformity in accordance with IEC 600079-27
- Safe operation in hazardous areas thanks to international approvals such as
  - FM IS, NI
  - CSA IS, NI
  - ATEX Ex ia, Ex nA (Ex nL)
  for intrinsically safe installation in zone 1 and zone 2
- High accuracy through sensor-transmitter matching
- Reliable operation with sensor monitoring and device hardware fault recognition
- Several mounting versions and sensor connection combinations
- Rapid no-tools wiring due to optional spring terminal technology
- Compatibility mode for easy replacement of the previous model iTEMP® TMT184

R/I Head transmitter type TMT85 (FOUNDATION FIELDBUS)

Dual-Input Temperature Head Transmitter with FOUNDATION™ Fieldbus communication

Application:

- Temperature head transmitter with 2 input channels and FOUNDATION Fieldbus™ protocol for the conversion of different input signals into digital output signals
- The iTEMP® TMT84 stands out due to signal reliability, long-term stability, high precision and advanced diagnostics (important in critical processes)
- For the highest level of safety, availability and risk reduction
- Usable for resistance thermometer (RTD), thermocouple (TC), resistance transmitter (Ω), voltage transmitter (mV)
- DIN B style head transmitter to fit in the smallest connection heads or in remote housings

Technical Characteristics:

- Easy and standardized communication via FOUNDATION Fieldbus™ H1
- Meets the EMC requirements as per NAMUR NE21 and the recommendations of NE89 with regard to temperature transmitters with digital signal processing
- Straightforward design of measuring points in Ex-areas through FISCO/FNICO conformity in accordance with IEC 600079-27
- Safe operation in hazardous areas thanks to international approvals such as
  - FM IS, NI
  - CSA IS, NI
  - ATEX Ex ia, Ex nA

  for intrinsically safe installation in zone 1 and zone 2
- High accuracy through sensor-transmitter matching
- Reliable operation with sensor monitoring and device hardware fault recognition
- Several mounting versions and sensor connection combinations
- Rapid no-tools wiring due to optional spring terminal technology

A.8.4 Air Purge Unit – LSP compact

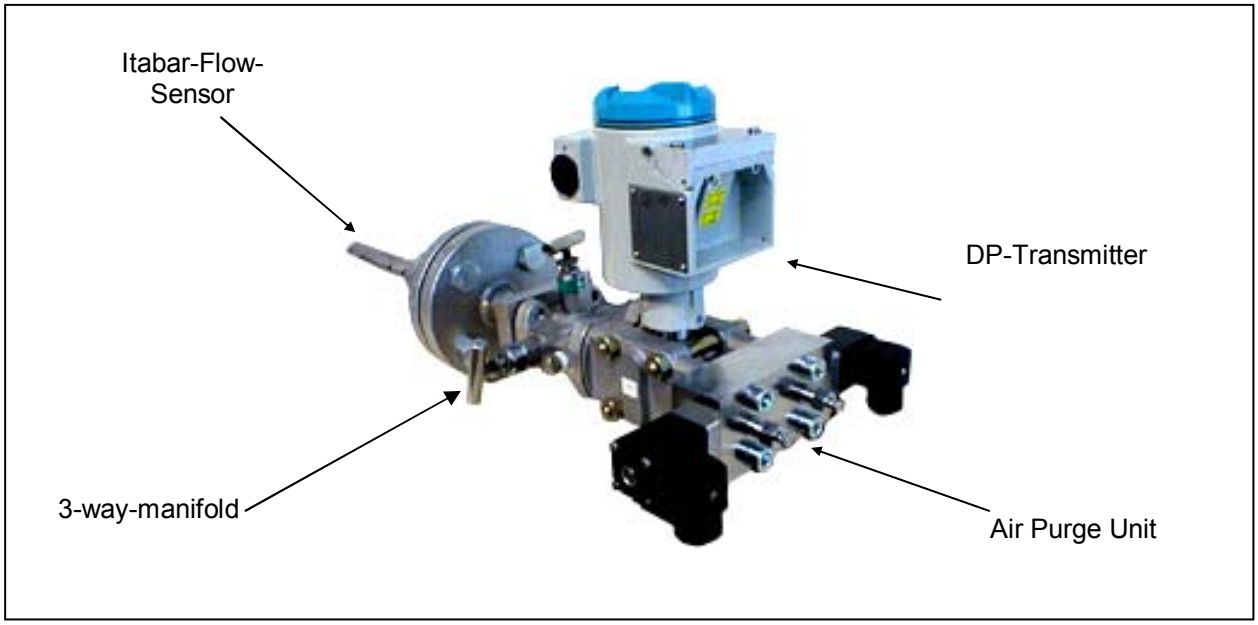

Fig 31: Air Purge Unit – LSP-compact, mounted to a measuring unit based on an Itabar.

Description

When measuring the flow of emissions or air containing particles it is possible that particles attach themselves in- and outside of the sensor walls, and – depending on the degree of coating – reduce the measurement accuracy or even eliminate the signal from the sensor altogether.

To manually clean the DP sensor in regular intervals is in many instances not a practical solution. The removal, thorough cleaning and re-installation is time consuming and expensive. Furthermore no signal is available during the cleaning process.

The LSP-compact air-purge unit allows such regular cleaning to be done automatically and with considerable cost savings.

The LSP-compact unit mainly consists of a purge block with a 2/2-way-valve which is directly addressable via a customer supplied relay or SPS. It is also possible to activate the LPS via the DigiFlow flow computer. The DigiFlow is programmable for purge duration, purge frequency, Slowing-down time . At the same time the DigiFlow maintains the last signal value during the cleaning process.

The LPS is delivered with all necessary mounting hardware and is installed by screwing one side of the purge block directly onto the DP transmitter. The pressure piping is attached to the other side. The vent screws are threaded into the purge block. It is thus ensured that not only the sensor but also the sensing chambers of the DP transmitter are purged of impurities. The standard ½“ NPT connections for the purge air supply are located on the sides of the block.

This compact design with few components avoids more complicated installation procedures in a separate enclosure.

Specifications Air Purge Unit LSP-compact

Medium:	Air
Valve type:	2/2 –way valve, direct-controlled
Function:	normally closed
Kv- flow value:	1,01 GPM
Nominal stroke:	0.04 inches
On-time ?:	100 %
Material of internal parts:	Stainless steel
Material gaskets:	FPM
Connection:	¼“ NPT
Orientation:	user selectable
nominal size	0.12 inches
Leak rate:	bubble tight
Protection class:	I
Isolation class:	F
Protection	IP 65 / Nema 4 (IEC 144)
Material of purge block	Aluminum or 316 SS (1.4571)

VERSIONS:	w/out Ex-protection	EEx d - Version
Ex protection:	NONE	EEx d IIC T4/T5 TO EN 50014 and EN 50018
Nominal voltage:	230 V / 50 Hz, 115 V /50 Hz and 24 V DC	230 V / 50 Hz, 115 V /50 Hz, 24 V DC and 24 V / 50 Hz
Electrical connections:	to DIN 43650	cable H05RN-F3G, 3 x 0,75 mm², 3 m long with cable glands and strain relief
Power consumption	21 VA (start up); 12 VA /8 W (oper.)	Nominal power cons. 7 W
Max. air supply pressure:	88,2 psi	58,8 psi
Medium temperature:	-34 ... +323 °F	-34 ... +306°F
Environmental temperature:	max. +187 °F	max. +136°F

Code	w/out Ex protection			Ex protection EEx d IIC T5			
Material of purge block:	230 V 50 Hz	115 V 50 Hz	24 V DC	230 V 50 Hz	115 V 50 Hz	24 V 50 Hz	24 V DC
Aluminum	EJG-1A	EJG-2A	EJG-3A	EJG-6A	EJG-7A	EJG-8A	EJG-9A
St Steel (1.4571)	EJG-1S	EJG-2S	EJG-3S	EJG-6S	EJG-7S	EJG-8S	EJG-9S

A.8.5 Digiflow 515 – Flow Calculator

Fig. 32: Front View DigiFlow 515

Microprocessor Gas and Steam Flow Computer **DigiFlow 515**
Energy Flow Computer (Consumption and Enthalpy for Steam)

Functions

- Indication of flow rate and total of volume, mass and energy
- Temperature and pressure compensation
- Input Signals 4…20 mA analogue or frequency or flow input
- Dual ranged d.p. transmitter inputs
- Simplified programming
- User menus in three languages
- Control of sensor purge unit
- Data logging output

The DigiFlow 515 combines compensation for gas and vapors to the following equations:

1. *Ideal Gas:* Temperature and pressure correction; compressibility correction not required.
2. *General Gas:* Temperature and pressure correction with compressibility correction calculated using the Redlich-Kwong[1] state equation. This equation is suitable for gases with known properties. Information about common industrial gases are provided in the operating manual.
3. *Natural Gas:* Compressibility is calculated using the AGA-NX-19-mod equation for natural gases of low gross caloric value.
4. *Steam Flow Computer*: Based on the IFC 1967. Mass flow correction of the flowing steam using pressure and temperature.
5. *Energy*: The heat quantity is calculated based on enthalpy and mass flow.(for steam)
6. *Energy Balance:* Assuming a mass balance in upstream-and downstream pipe, an energy balance of the loop is calculated. (for steam in upstream)

Inputs from various flow meters are accepted. Examples of these sensors are (VORTEX), turbine, orifice plate, averaging pitot tubes like (Itabar-Flow sensor), wedges and target flow meters. To increase the measured flow range of an Itabar-Flow sensor, it is possible to use two differential pressure transmitters whose ranges overlap with automatic crossover in the computer.

[1] Redlich & Kwong “An Equation of State”, Chem Rev., vol. 44, p 233, 1949

The backlit two rows alphanumeric display shows the instantaneous readings of Flow or Totals, and the four key touchpad it is used to program and configure the unit.

All DigiFlow 515's are equipped with 4 analog inputs 4 – 20mA, 2 frequency inputs and 2 Pt100–inputs for RTD according to DIN 43760 in 2–,3– or 4–wire connection.

A scaleable pulse output to drive external counters, 2 relay outputs for Low/High-Flow alarms and an RS232 interface are also standard features of the DigiFlow 515.

Optionally there are up to two scaleable analogue outputs available.

There is also a capability to control a sensor purge unit for automatic purge control in hazardous environments.

The pulse output and the alarm outputs operate proportionally to the mass, corrected volume or energy depending on which value will be displayed as Standard Display.

The analogue output can be assigned to one of measured or calculated values, indicated on the display.

The RS232/RS485 Interface will output all parameters which are displayed. This can be done to a printer or a host computer.

An integrated real time clock is included to send protocols in selectable intervals, up to 9999min. Accumulated totals may be reset.

The Totals can be reset by pressing the related key on the keyboard or by a voltage input at the related rear-terminal jack.

The DigiFlow 515 is powered by AC of 115/230 VAC 50/60 Hz. Optionally voltages between 24 and 28 V AC/DC.

The DigiFlow 515 provides an adjustable voltage of 18V DC for powering sensors. Maximum current is 100mA.

Flow meter inputs

Most types of flow meters can be used in conjunction with the DigiFlow 515. Including:

1. *Linear frequency producing* flow meters like (VORTEX), turbines or positive displacement.
2. *Non–linear frequency producing* flow meters.
   A 12 point correction curve can be programmed to linearize the signal.
3. *Volumetric* flow meters with outputs of 4 – 20mA such as (VORTEX) or turbine meters with a frequency to current converter on the output.
4. *Differential Pressure devices* for ITABAR–sensors or orifice plates, where a square law relationship applies.
5. *Linear Differential Pressure devices* where the 4 – 20mA output is proportional to the flow rate.
6. *Dual Range Differential Pressure devices* where two separately spanned transmitters are used across a common flow device (ITABAR–sensor).
7. *Non–linear Differential Pressure devices* like laminar flow tubes.
   A 12 point correction curve can be programmed to linearize the signal

Parameters displayed

During operation the display shows information which is to be selected by pressing the SCAN-key. After one minute, without any key pressed, the display will return to the selected standard-display.

Standard display:
- Mass, corrected volume or energy flow rate in units per day, hour, minute or second.
- By pressing the TOTAL-key the display changes to display the accumulated totals of mass, volume or energy. These counters can be reset by pressing the RESET key if allowed.

Gas Flow:
- Corrected volume (Nm³ or SCF)
- Mass (kg or lbs)
- Temperature (°C or °F) and pressure (kPa or psi)
- Compressibility (except ideal gas)
- Date and time

Steam Flow:
- Mass (kg or lbs)
- Energy (MJ or BTU)
- Temperature (°C or °F) and pressure (kPa or psi) in upstream
- Specific weight (kg/dm³) and enthalpy (dm³/kg or kJ/kg) in upstream
- Temperature (°C or °F) and pressure (kPa or psi) in downstream [only for energy-balance]
- Specific weight (kg/dm³) and enthalpy (dm³/kg or kJ/kg) in downstream [only for energy-balance]
- Date and time

B Itabar-Flow-Sensors for Fluids and Gases
B.1 General Information
B.1.1 Selection Criteria

The following tables allow to select a model series depending on the given measurement task, the operating pressure, the operating temperature as well as the desired installation and assembly design.

Installation / Removal **with** Process Shut Down	IBR	IBF	IBF-100
Measurement task:			
Measurement of liquids, gases and gas mixtures	✓	✓	✗
Measurement of flue gases	✓	✓	✓
Possible operating pressures:			
6 bar; 16 bar	✓	✓	✓
40 bar; 63 bar	✓	✓	✗
100, 160, 250, 320 and 400 bar	✗	✓	✗
Max. operating temperature:			
200 °C (25 bar)	✓	✓	✓
1175 °C, material dependent	✗	✓	✓
Materials of mounting parts:			
Carbon Steel, 1.4571	✓	✓	✓
1.4462 Duplex, 1.4539, Hastelloy C4, Incoloy 800, Inconel, Monel, PVDF	✗	✓	✓
Sensor materials:			
316Ti (Standard)	✓	✓	✓
1.4432 (Duplex), Inconel, Monel	✗	✓	✗
1.4539, Hastelloy C4, Inconel 800, PVDF	✗	✓	✓
3.7035 (Titan Gr. 2)	✗	✓	✗
Design features:			
Threaded connection with mounting stud and screw-down-nut for installation of sensor to pipe	✓	✗	✗
Flanged connection to install the sensor to pipe	✗	✓	✓
Opposite end support with threaded removable blind flange for ease of sensor cleaning.	✗	✗	✓

Installation / Removal **without** Process Shut Down	**FTN**	**FTM**	**FTH**
Measurement task:			
Measurement of fluids, gases and gas mixtures	✓	✓	✓
Measurement of flue gases	✓	✓	✓
Possible operational pressures:			
6 bar	✓	✓	✓
16 bar, 40 bar;	✗	✓	✓
63 bar, 100 bar	✗	✗	✓
Max. operational temperature:			
200 °C	✓		
300 °C		✓	✓
400 °C			✓
Materials of mounting parts:			
Carbon steel, 316Ti	✓	✓	✓
1.4462 Duplex, 1.4539, Hastelloy C4, Incoloy 800, Inconel, Monel, Titanium	✗	✗	✓
Sensor material:			
316Ti (Standard)	✓	✓	✓
1.4432 (Duplex), 1.4539, Hastelloy C4, Monel, Titanium	✗	✗	✓
Design features:			
Threaded connection with mounting stud and screw-down-nut for installation of sensor to pipe	✓	✗	✗
Flanged connection to install the sensor to pipe	✗	✓	✓
Protective safety chain during removal	✓	✗	✗
Threaded rods for easy extraction	✗	✓	✓
Optional: Gear box with hand wheel	✗	✓	✓

B.1.2 Sensor Heads and Mounting Parts

Fig. 33: Sensor head with ½ " NPT, only for gases and liquids

Fig. 34: Sensor head with flange plate to direct-mount a 3-way manifold. Limited use w/out pipe insulation, gases to $pressure_{max}$ = 63 bar (926 psig) and $temp_{max}$ = 200 °C (680°F) liquids to $pressure_{max}$ = 63 bar (926 psig) and $temp_{max}$ = 150°C (510°F)

Fig. 35: Threaded weld boss for IBR-25/26 mat. Carbon steel, 316 SS

Fig. 36: Installation stud in weld-o-let version

Dimension „H“ (Mounting stud length)

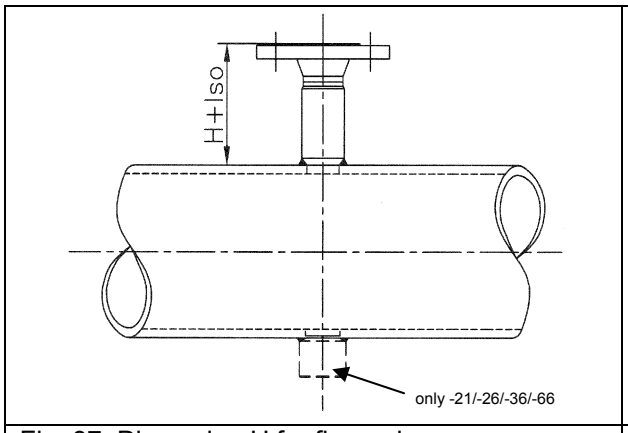

Fig. 37: Dimension H for flanged process connection

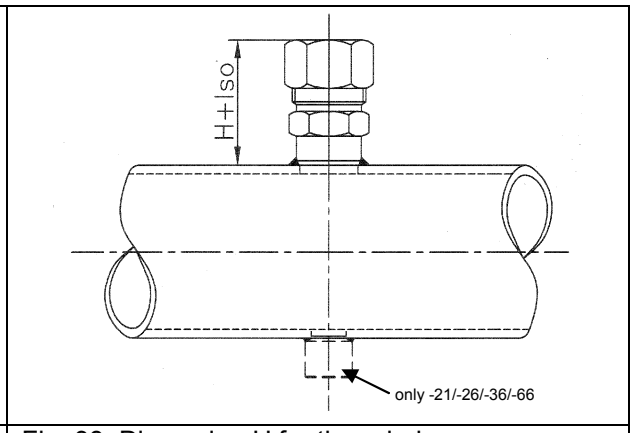

Fig. 38: Dimension H for threaded process connection

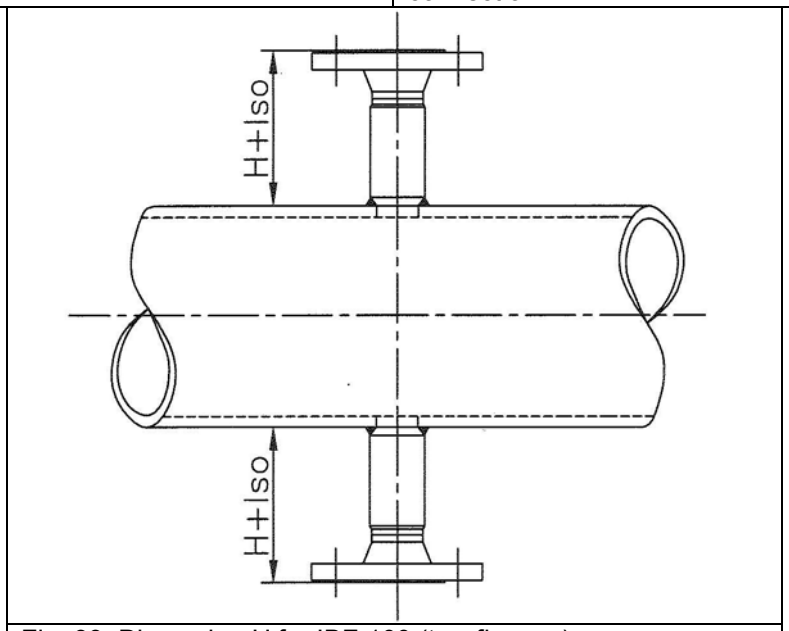

Fig. 39: Dimension H for IBF-100 (two flanges)

ISO = thickness of insulation (if applicable)

Sensor Type	Itabar®-Series				
	IBR	IBF*	FTN	FTM	FTH*
-20/21	50 mm + ISO	80 mm + ISO	50 mm + ISO	50 mm + ISO	80 mm + ISO
-25/26	68 mm + ISO	127 mm + ISO	50 mm + ISO	50 mm + ISO	127 mm + ISO
-35/36	60 mm + ISO	150 mm + ISO	50 mm + ISO	50 mm + ISO	150 mm + ISO
-65/66		146 mm + ISO			146 mm + ISO
-100		150 mm + ISO			

Important: The indicated H-dimensions are only valid for applications without insulation. If the pipe is insulated, please add the thickness of the insulation to the related H-dimension.

*** Only for pressure ratings up to PN 100 [600 #], higher ratings on request.**

B.1.3 Heat Insulation

"Installation stud extention – so that fitting is outside of insulation"

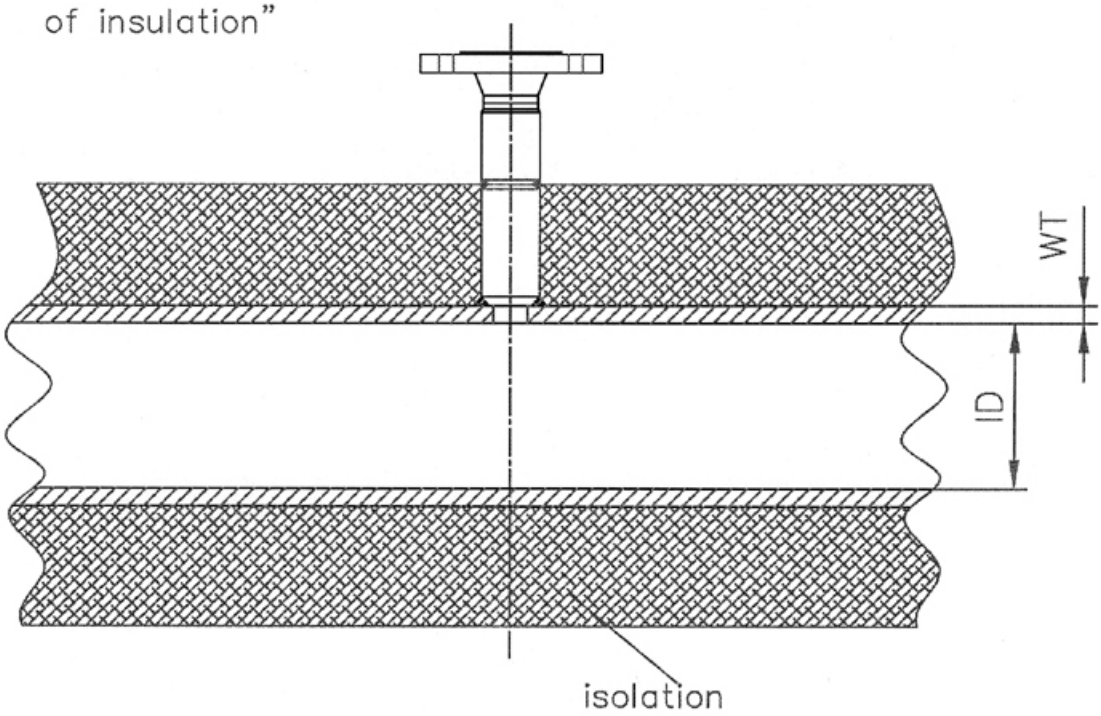

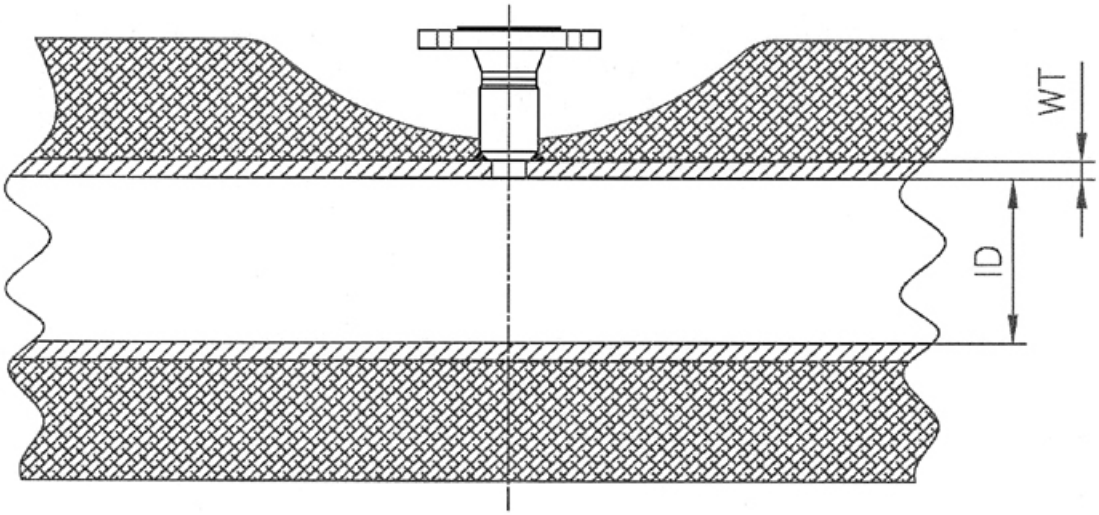

"If an extention is not included, the isolation must be reduced – increased insulation effort"

B.1.4 Saddle Flange Version for Cast / Pig Iron, Steel and AZ Pipes (Asbestos-Cement-Pipe)

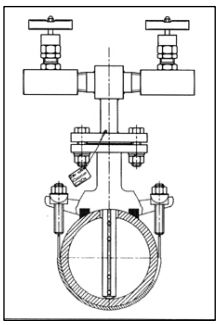

The saddle flange version is a special assembly version for pitot tubes in cast iron, steel and asbestos steel pipes. Common pipe diameters are between 2 ¼“ to 20“ (DN 65 to DN 500). Larger nominal sizes can be realized on request.

The picture on the right side shows a pitot tube sensor type IBF-25 in saddle flange version. This version consists of a drill-clamp with flange PN 4 / 58.0 psi (gas) / PN 16 / 232.1 psig (water) and, at least, one saddle clamp.

Saddle flange versions are not available for flow sensors with opposite end support.

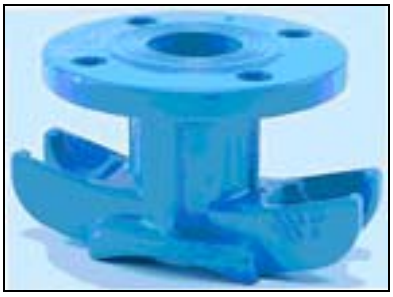

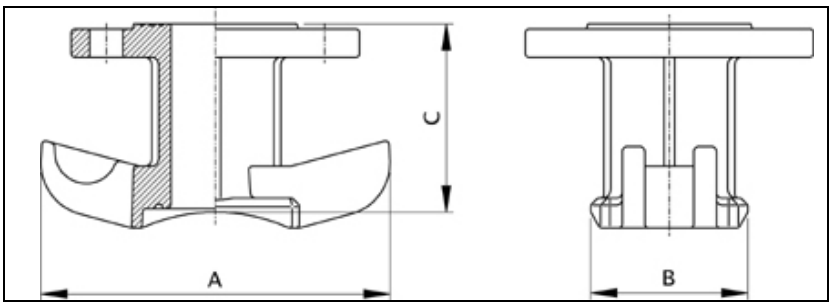

Fig 40: Universal drill-clamp with flange pipe size 2“ DN 40/50 PN 4 / 58.8 psig (gas) / PN 16 / 235.2 psig (water)

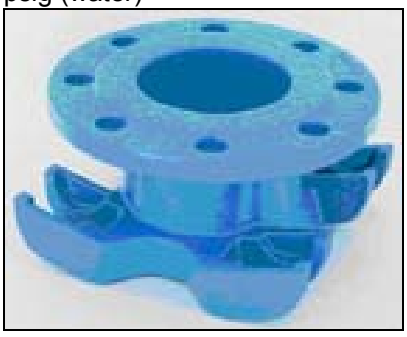

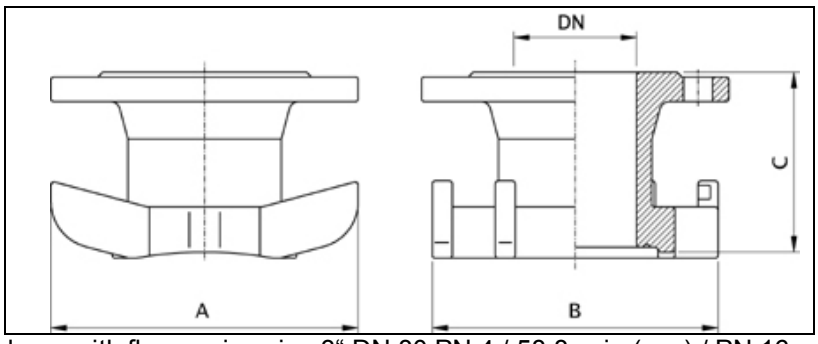

Fig 41: Double saddle clamp- drill-clamp with flange pipe size 3“ DN 80 PN 4 / 58.8 psig (gas) / PN 16 / 235.2 psig (water)

Fig. 42: Saddle clamp, fully vulcanized

Fig.. 43: Saddle clamp, stainless, acid-resistant steel (304SS)

	Saddle clamp, fully vulcanized	**Saddle clamp, 304 SS**	**Saddle clamp for AZ-pipes**
Figure:	36	37	without
Use for pipe types:			
♦ welded pipe acc. DIN 2060	✓	✓	✗
♦ welded pipe with PE-cover to DIN 36670	✓	✓	✗
♦ Cast pipe to DIN 28610 bitumized	✓	✓	✗
♦ Cast pipe w/ PE-cover to DIN30674 T 1	✓	✓	✗
♦ Cast pipe to DIN 28610 w/ ZM-cover	✓	✓	✗
♦ Asbestos-cement-pipe 10 bar (145 psig)	✗	V	✓
♦ Asbestos-cement pipe 12,5 bar (181.3 psig)	✗	✗	✓
♦ Asbestos-cement-pipe 16 bar (232.1 psig)	✗	✗	✓
Pipe outside diameter:	87-470 mm (3.4-18.5“)	75-582 mm (2.9-22.9“)	97-494 mm 3.8-19.4“
Width of saddle:	70 mm (2.7“)	65 mm (2.6“)	90 mm (3.5“)
Material of saddle:	Stainless Steel, fully vulcanized	1.4301 (304SS)	1.4301 (304SS)
Saddle gasket:	NBR	NBR	NBR
Order code (x= pipe outside ∅ in mm):	HB1-x	HB2-x	HB3-x

B.1.5 Material Overview

Material No.	Temp.range	Use	Use
316 SS (Standard)	550°C 1870°F	Extraction facilities, dryers, mixing- and batching facilities, evaporators, distilleries, and other	The Cr-Ni-Mo alloyed material is very resistant against reducing organic and inorganic acids, as well as against halogen-containing media. This steel is furthermore less susceptible to selective corrosion. The titanium stabilized material exhibits slightly better heat properties with somewhat less resistance to acids.
1.4462 (st steel)	Duplex	Sea water desalination plants, petro-chem industry, off-shore technology, evaporators, extraction facilities, distilleries, dryers	Good mechanical properties combined with high resistance against general corrosion, tear- and oscillation corrosion.
1.4539 (st steel)	450-800°C 1530-2720°F	Flue gas sulfur elimination (scrubbers), below dew point	The material is a highly acid resistant specialty steel with particularly good resistance to sulfuric and phosphoric acid at concentrations of up to 70% and operating temperatures of up to 80°C. Furthermore this material is resistant against concentrated organic acids, even at high temperatures, as well as against salt- and soda solutions. The steel is especially insensitive to selective corrosion and tear corrosion.
2.4610 NiMo16Cr16Ti Hastelloy C4	650-1040°C 2210-3536°F	Flue gas sulfur elimination (scrubbers), chlorine gas	Excellent stability in the chemical process industry against strong oxidizing media, hot contaminated mineral acids, solvents, chlorine- and chlorine contaminated media (organic and inorganic), anhydrous bleach acid, formic acid, distilled vinegar , Essighydrid-, seawater, and The alloy exhibits great ductile strength and resistance to corrosion even in temperatures of 650 – 1040°C. Resistant to build-up of Korngrenzkariben and is therefore in most cases usable without heat treatment after welding.
1.4876 X10NiCrAiTi3320 Incoloy 800	900°C 3060°F	Hydrogen facilities	This alloy is resistant against corrosion from hydrogen and hydrogen sulfides as well as against tension corrosion.
2.4816 NiCr15Fe Inconel 600	1175°C 3995°F	air heaters	Excellent oxidation resistance up to 1175°C with superb general resistance to corrosion. Maintains high stability up to approx. 650°C. Good mechanical properties even in low temperatures. Because of its resistance to chloride-corrosion this alloy is also used in nuclear reactor components. Can be welded w/out heat treatment.
2.4360 NiCu2Ofe Monel	425-550°C 1445-1970°F	Extraction facilities, dryers, mixing – and batching plants, evaporators distilleries, sea water desalination plants	The Cr-Ni-Mo alloyed material is very resistant against reducing organic and inorganic acids, as well as against halogen-containing media. This steel is furthermore less susceptible to selective corrosion. The titanium stabilized material exhibits slightly better heat properties with somewhat less resistance to acids.
PVDF	-40 to +120°c -136°F to +408°F	Chemical plants, flue gas cleaning (scrubbers), filter technology	Well suited for many aggressive acids, many solvents and cleaning agents, hot water resistant
1.5415 15 Mo 3	530°	High pressure steam applications	
1.7335	550°C 1802°F	High pressure steam applications	
1.7380 10 CrMo 4 4	570°C 1938°F	High pressure steam applications	
1.4903 10 CrMoVNB 91	650°C 2210°F	High pressure steam applications	High pressure steam, energy and environmental technologies, chemicals/ petro-chem, oil- and gas industries, cryogenics, food and beverage industry, plastics

B.1.6 Technical Specifications

Sensor materials			
DIN	**Commercial Designation**	**AISI**	**UNS**
1.4571 (Standard)	316Ti	316Ti	S31635
1.4462	Duplex		S31803
1.4539			N08904
2.4610	Hastelloy C4		N06455
1.4876	Incoloy 800		008811
2.4816	Inconel 600		N06600
2.4360	Monel		N04400
PVDF			-
1.5415	15 Mo 3		K12020
1.7335	13 CrMo 44		K11562
1.7380	10 CrMo 910		-
1.4903	X 10 CrMoNVb	B 348 Gr. 2	-

Pipe inside diameter	1 ½“ – 480“ (DN 20 - DN 12000)
Max. operating pressure	PN 400 / 5880 psig (depending on sensor type)
Max. operating temperature	1200°C (4080°F) (depending on sensor material)
Accuracy	± 0,3 % of full scale

- Low permanent pressure loss (energy savings)
- Applicable from Re = 3150
- Direct mass flow measurement (integrated temperature and flow measurement
- Direct-mount of electr. DP transmitter
- Low contamination due to large pressure sensing ports
- Itabar-Flow-Sensors with certified accuracy, tested at water calibration facility ABB Göttingen / Germany. All sensor types from DN 400 (16”) to DN 1600 (64”) have been calibrated and tested – see test protocols.
- Material certificates available in 3.1 and 3.2
- FloTap-versions allow installation and removal under pressure (wet-tap)
- Flow measurement in rectangular or square ducts is possible.

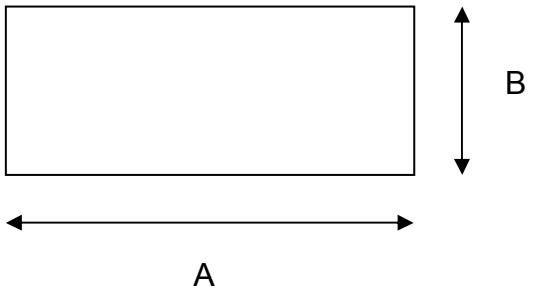

$$Substitute\ Diameter = 2 * \sqrt{\frac{A * B}{\pi}}$$

The sensor is always made foe the longer side to better cover the flow profile.

- Shorter straight pipe run requirements as compared to orifice plates and nozzles.

B.1.7 Installation Position (Flow sensors for liquids and gases)

1. **Gases**, if possible the sensor should be inserted into the pipe from the top or from the side. In case the gas contains moisture, liquid drops can migrate back into the measurement chambers. If the sensor is installed into the bottom of a pipe an increase in the liquid column can cause measurement errors.

Fig. 44: Recommended orientation for measurement of gases

2. **Liquids**, sensor installation from side or from below into pipe, never from above (as opposed to gases). Air bubbles rise and cause measurement errors, transmitter always below the pressure connections.

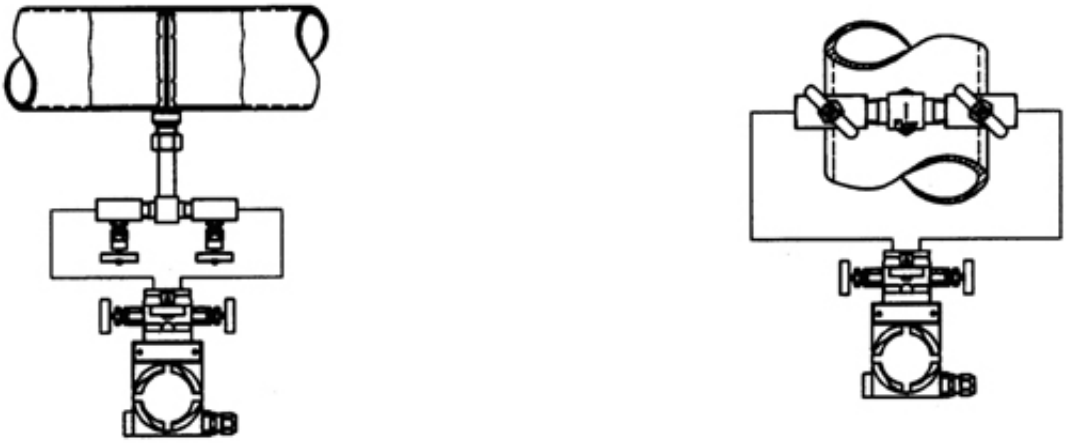

Fig. 45: Recommended sensor orientation for liquid measurement

B.2	**Itabar®-Flow-Sensors for Liquids and Gases (fixed installation)**
B.2.1.	**Itabar®-Flow-Sensors with Threaded Process Connection Types: IBR-15/20/21/25/26 (up to 588 psi) and IBR-35/36 (up to 235 psi)**

a.) Description:

The Itabar®-Flow-Sensors series IBR is used for measuring volumetric flow of liquids and gases. It is designed to be installed through thread weld-o-let pipe mounting parts. It offers a good price / performance ratio in applications with no high temperature or pressure requirements. Standard sensor material is 316 SS. The design is such that the Δp-transmitter can be integrally mounted onto the sensor via an optional 3-way-manifold. An optional RTD temperature sensor is available for mass flow measurement.

Abb. 46: Itabar IBR-25 for pipe ID d_i = 5,76 inches

b.) Drawings for IBR

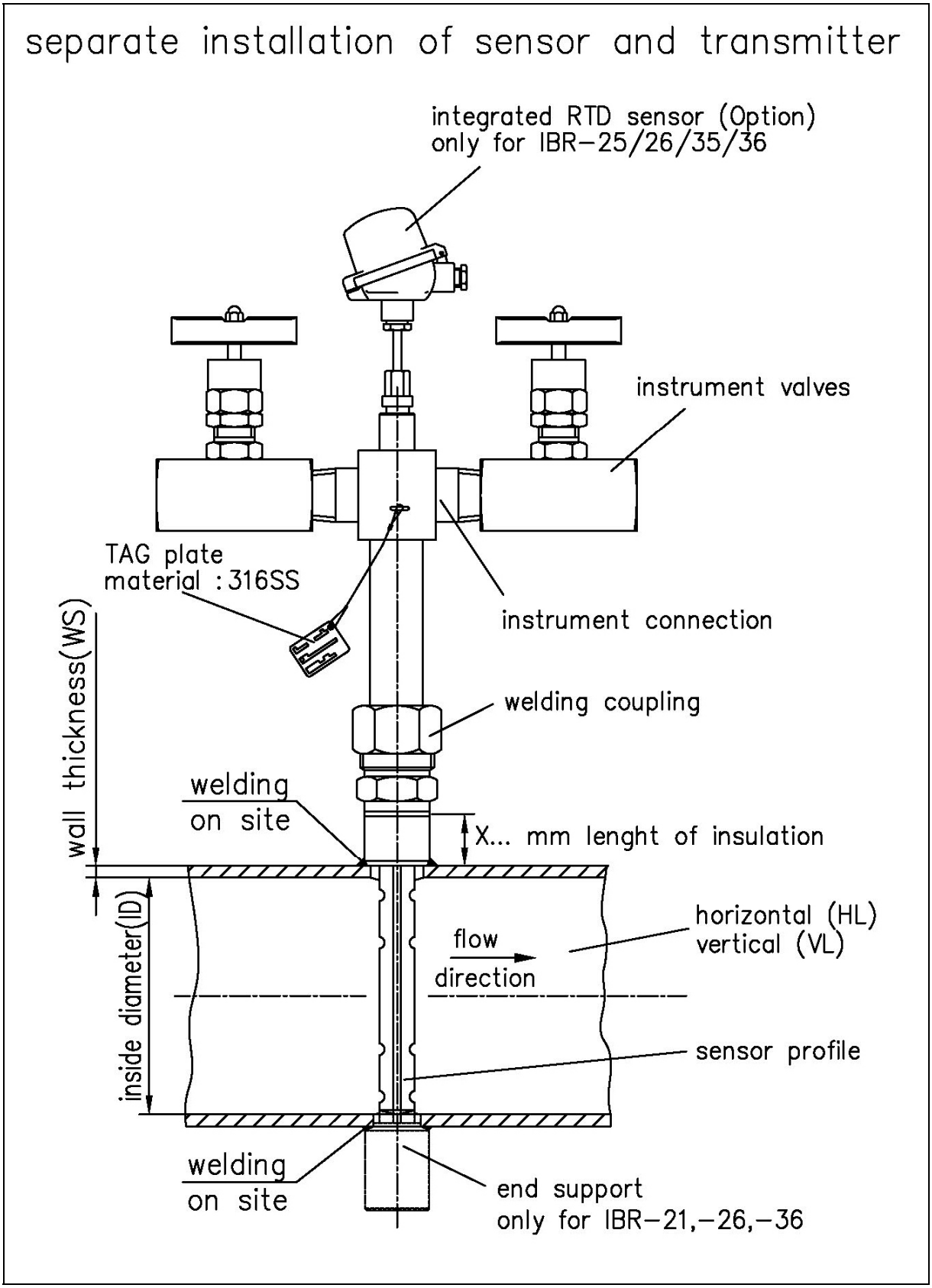

compact version electr. d.p.transmitter mounted onto the flow sensor (only with A06)

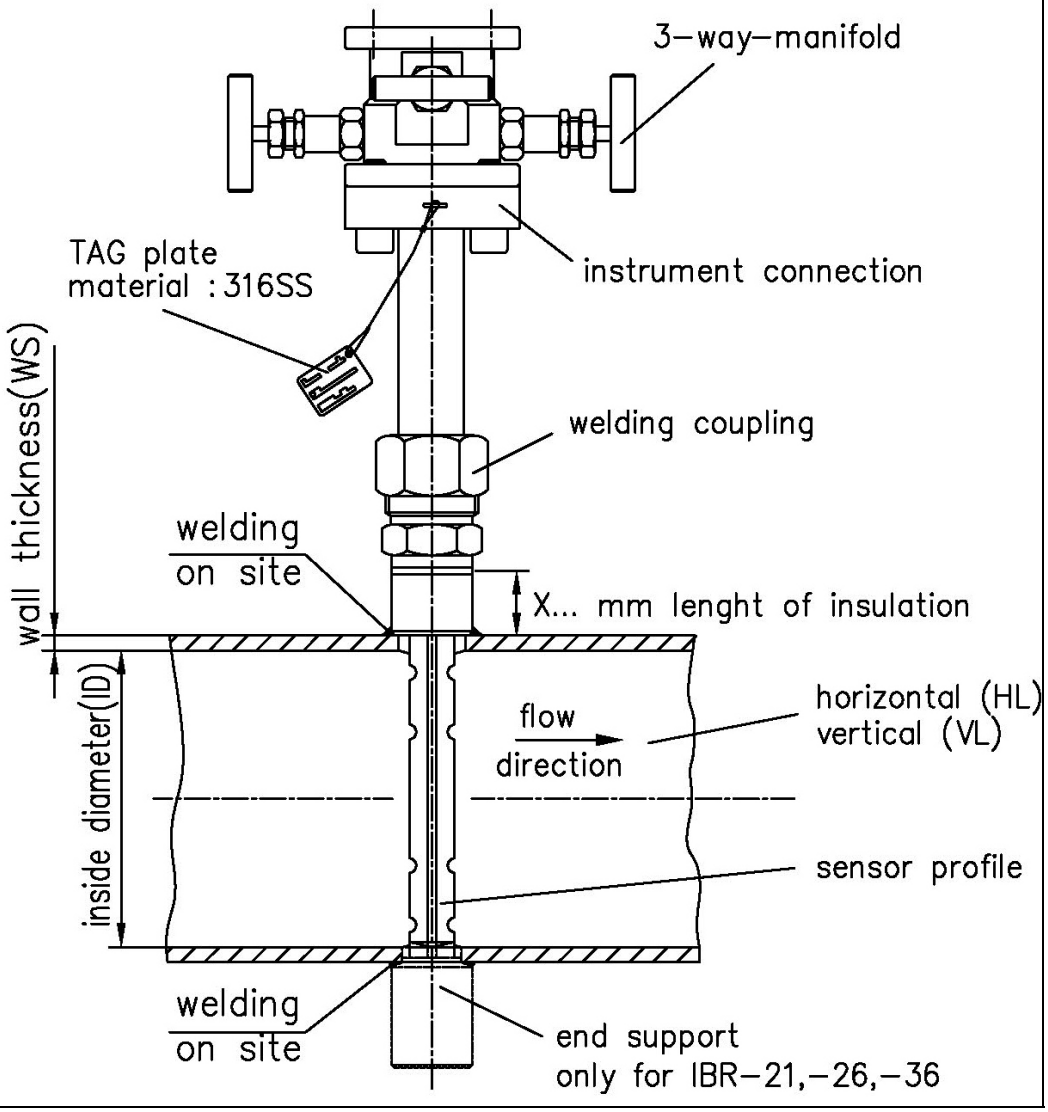

c.) Order Data for IBR-15/20/21/25/26/35/36

c.1) Sensor type:

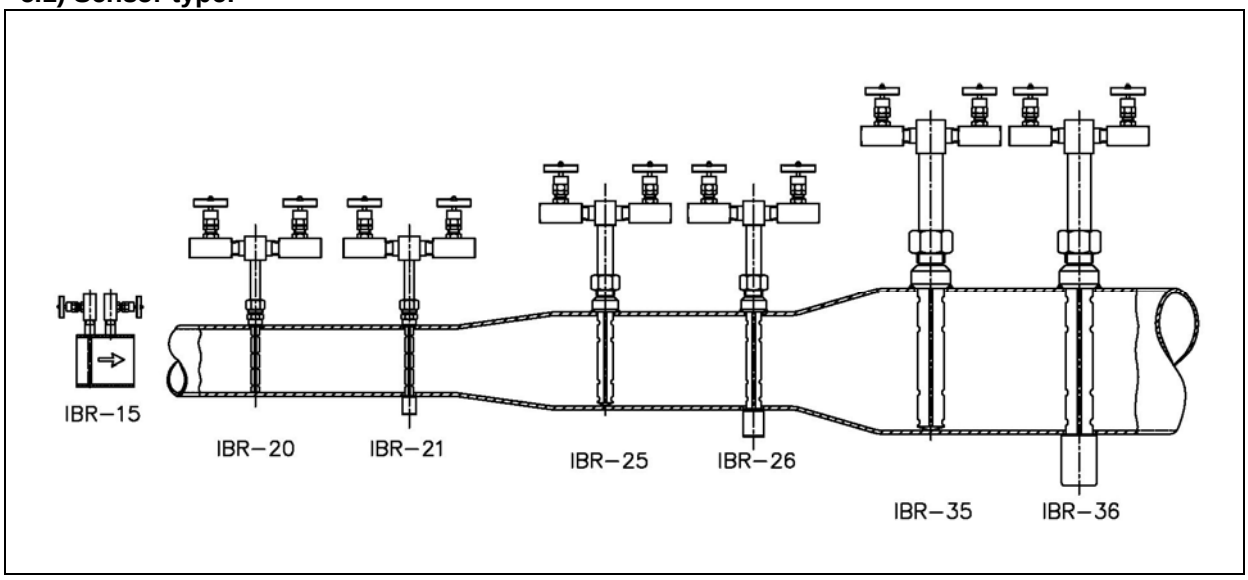

Pipe Size DN	Pipe Size Inches	Max. volumetric flow m³/h						
		IBR-15	IBR-20	IBR-21	IBR-25	IBR-26	IBR-35	IBR-36
DN 25	1	36	---	---	---	---	---	---
DN 32	1 ¼	51	---	---	---	---	---	---
DN 40	1 ½	---	52	123	---	---	---	---
DN 50	2	---	75	175	---	---	---	---
DN 65	2 ¼	---	114	264	---	---	---	---
DN 80	2 ½	---	156	355	---	---	---	---
DN 100	4	---	210	476	256	594	---	---
DN 125	5	---	---	---	341	784	---	---
DN 150	6	---	---	---	426	973	---	---
DN 200	8	---	---	---	595	1345	---	---
DN 250	10	---	---	---	776	1747	---	---
DN 300	12	---	---	---	970	2178	2004	4501
DN 350	14	---	---	---	1155	2592	2408	5399
DN 400	16	---	---	---	1335	2990	2813	6300
DN 500	20	---	---	---	1707	3820	3584	8018
DN 600	24	---	---	---	2069	4629	4369	9770
DN 700	28	---	---	---	2441	5461	5180	11580
DN 800	32	---	---	---	2835	6336	6009	13432
DN 900	36	---	---	---	3220	7246	6851	15315
DN 1000	40	---	---	---	6362	8182	7703	17218
DN 1200	48	---	---	---	4493	10040	9401	21027
DN 1400	56	---	---	---	5295	11869	11108	24823
DN 1600	64	---	---	---	6094	13607	12806	28612
DN 1800	72	---	---	---	---	---	14438	32249
DN 2000	80	---	---	---	---	---	16067	35879

These values are for water of ρ = 0,9982 kg/l SGU and at a temperature T = 20 °C. To calculate volumetric or mass flow of fluids with other densities see chapter 6 „Specifications of DP Sensors with WINFLOW“.

d.) Order Specification Itabar-Flow-Sensors, Series IBR

d.1) IBR-15

1. Type of Sensor	
IBR-15	without end support
2. Inside Diameter and Wall Thickness	
ID/WT	Inside diameter and wall thickness in mm (or inches), please specify
3. Sensor Material	
S	316Ti (1.4571)
4. Pipe run at place of installation	
HL	horizontal
VL	vertical (only for dry gases)
5. Process Connection	
	Please see page 72
6. Instrument Valves	
	Please see page 72

Order key IBR-15

1. Type of Sensor					
	2. Inside Diameter and Wall Thickness in mm (or inches)				
		3. Sensor Material			
			4. Pipe Run		
				5. Process Connection	
					6. Instrument Valves
IBR-15	***/***	**S**			

d.2) IBR-20/21

1. Type of Sensor	
IBR-20	without end support
IBR-21	with end support
2. Inside Diameter and Wall Thickness	
ID/WT	Inside diameter and wall thickness in mm (or inches), please specify
3. Sensor Material	
S	316Ti (1.4571)
4. Welding Coupling	
00	without
07	CS
07.1	copper, incl. adapter – only for pipe made of copper
08	316Ti (1.4571)
5. Material End Support (only IBR-21)	
Y	without end support
C	CS
S	316Ti (1.4571)
K	copper
6. Insulation	
KI	without
X..	Insulation in inches (mm), please specify
7. Pipe run at place of installation	
HL	horizontal
VL	vertical (only for dry gases)
8. Process Connection	
	Please see page 72
9. Instrument Valves	
	Please see page 72

Order key IBR-20/21

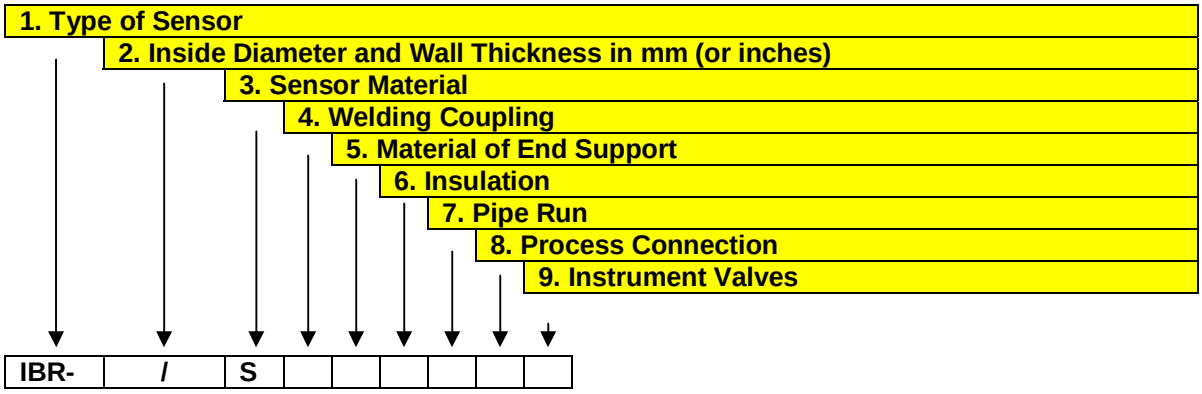

d.3) IBR-25/26

1. Type of Sensor	
IBR-25	without end support
IBR-26	with end support
2. Inside Diameter and Wall Thickness	
ID/WT	Inside diameter and wall thickness in mm (or inches), please specify
3. Sensor Material	
S	316Ti (1.4571)
4. Welding Coupling	
00	without
07	CS
07.1	copper, incl. adapter – only for pipe made of copper
08	316Ti (1.4571)
5. Material End Support (only IBR-26)	
Y	without end support
C	CS
S	316Ti (1.4571)
K	copper
6. Insulation	
KI	without
X..	Insulation in inches (mm), please specify
7. Pipe run at place of installation	
HL	horizontal
VL	vertical (only for dry gases)
8. PT-100-Sensor (RTD)	
T0	without
TA	3-wire
TB	2-wire, with Ex-approval
9. Head transmitter for RTD	
	Please see page 45
10. Process Connection	
	Please see page 72
11. Instrument Valves	
	Please see page 72
12. Accessories (only with connections A03, A04)	
0	without
SPA	1/8”-NPT cleaning ports

Order key IBR-25/26

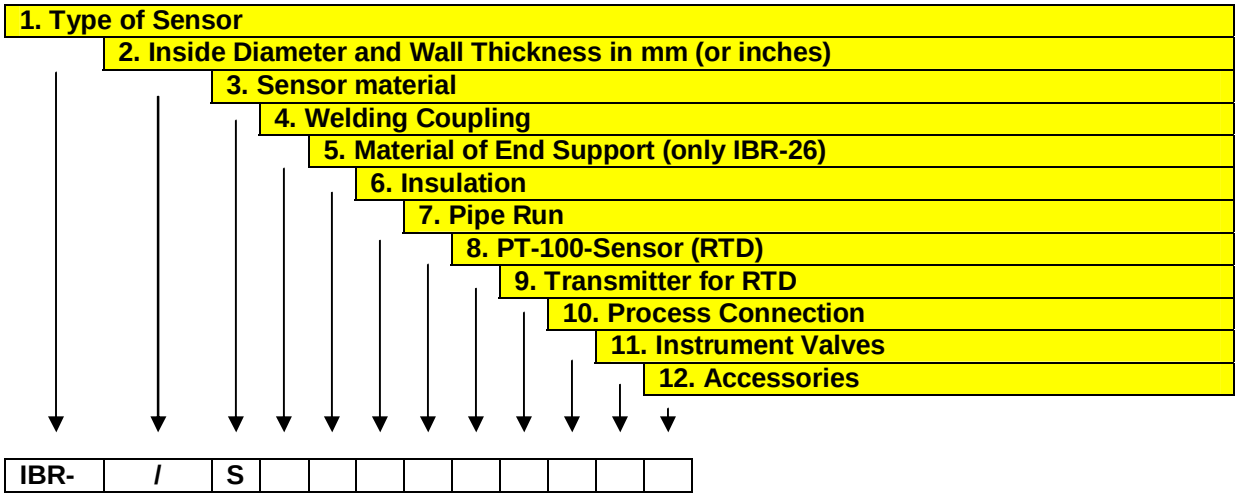

d.3) IBR-35/36

1. Type of Sensor	
IBR-35	without end support
IBR-36	with end support
2. Inside Diameter and Wall Thickness	
ID/WT	Inside diameter and wall thickness in mm (or inches), please specify
3. Sensor Material	
S	316Ti (1.4571)
4. Welding Coupling	
00	without
07	CS
07.1	copper, incl. adapter – only for pipe made of copper
08	316Ti (1.4571)
5. Material End Support (only IBR-36)	
Y	without end support
C	CS
S	316Ti (1.4571)
K	Copper
6. Insulation	
KI	without
X..	Insulation in inches (mm), please specify
7. Pipe run at place of installation	
HL	horizontal
VL	vertical (only for dry gases)
8. PT-100-Sensor (RTD)	
T0	without
TA	3-wire
TB	2-wire, with Ex-approval
9. Head transmitter for RTD	
	Please see page 45
10. Process Connection	
	Please see page 72
11. Instrument Valves	
	Please see page 72
12. Accessories (only with connections A03, A04)	
0	without
SPA	1/8”-NPT cleaning ports

Order key IBR-35/36

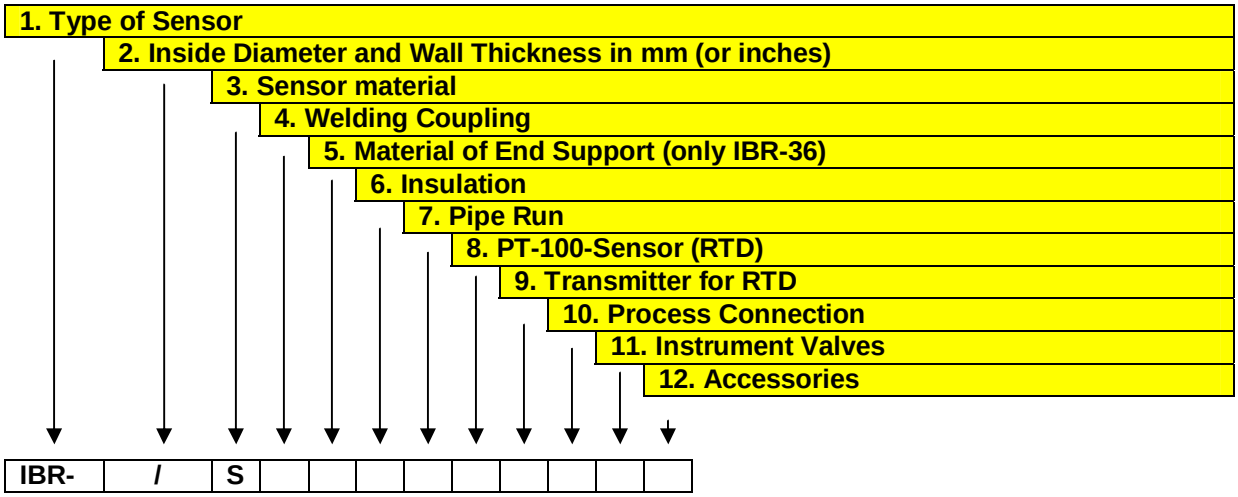

e) Ordering Codes for Instrument Connection and Shut-off Device for Itabar-Flow-Sensors type IBR

Code	Description
Instrument Connection	
A04	Sensor head with ¼” NPT-M
A03	Sensor head with ½” NPT-M
A06	Flange plate for direct mounting of a 3-way-manifold, material 316Ti
A15	Flange plate for direct mounting of a 5-way-manifold, material 316Ti

Shut-off Device for Impulse Pipes	
A00	without
A55	ball valve PN 40; case C.S. / ½” NPT-F, packing: PTFE
A56	ball valve PN 40; case A182-F316H (1.4401) / ½” NPT-F, packing: PTFE
A57	ball valve PN 40; case C.S. / ¼” NPT-F, packing: PTFE
A58	ball valve PN 40; case A182-F316H (1.4401) / ¼” NPT-F, packing: PTFE
A59	shut-off valve PN 400, case C.S., ¼” NPT-F, packing: graphite
A60	shut-off valve PN 400, case A182-F316H (1.4401), ¼” NPT-F, packing: graphite
A61	shut-off valve PN 400, case C.S., ½” NPT-F, packing: graphite
A62	shut-off valve PN 400, case A182-F316H (1.4401), ½” NPT-F, packing: graphite
A63	shut-off valve ½” NPT, PN10, PTFE
A64	shut-off valve G ½”, PN10, PVDF
A66	direct mounted, with 3-way-manifold, PN400, case A182-F316L/316L (1.4404) packing: PTFE (only with A06)
A67	direct mounted, with 3-way-manifold, PN10, case PTFE, packing: PTFE (only with A06)
A71	direct mounted, with 5-way-manifold, PN400, case A182-F316L/316L (1.4404) packing: PTFE (only with A15)

Accessories	
E12	1 pair of screw joints ½” NPT-M / ∅ **12 mm**, 316SS (1.4571)
E14	1 pair of screw joints ½” NPT-M / ∅ **14 mm**, 316SS (1.4571)

B.2.2 Itabar®-Flow-Sensors with Flanged Process Connection Types: IBF-20/21/25/26/35/36/65/66 (up to 5801 psi)

a.) Description:

The ITABAR-sensor series IBF is designed to measure the volumetric flow of liquids and gases. The sensor flange is threaded to a pipe mount welding boss, which makes the use in max 5801 psi applications possible. The maximum pressure is a function of the flange rating.

The standard sensor material is 316 SS; the following materials are optional alternatives: 1.4462 (Duplex), 1.4539, Hastelloy C4, Incoloy 800, Inconel, Monel.

Fig. 47: Itabar-Flow-Sensor IBF-25 for a pipe with ID 146,3 mm. The DP transmitter is remotely mounted and is connected to the sensor through Ermeto- pipe

b.) Drawings for IBF

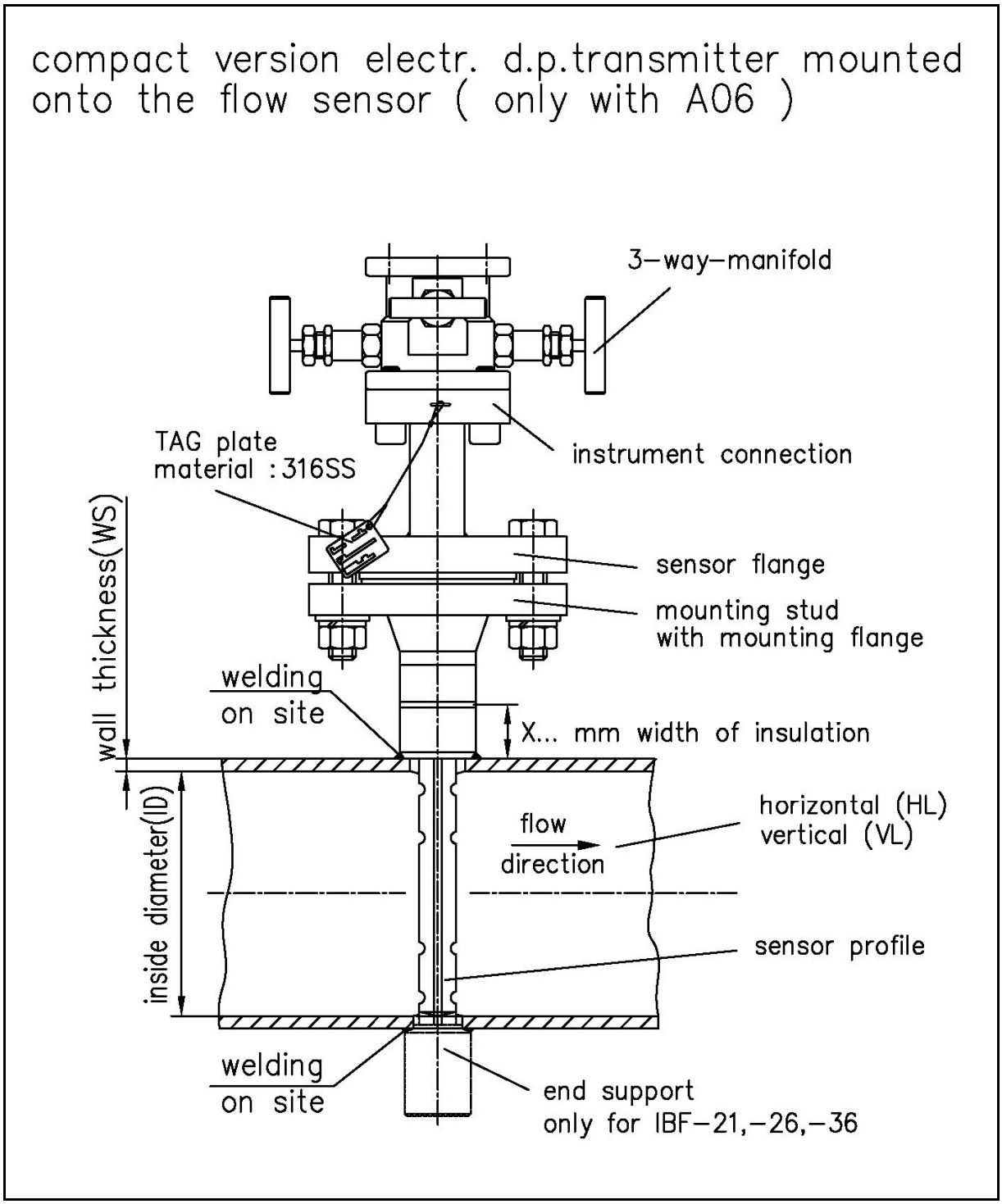

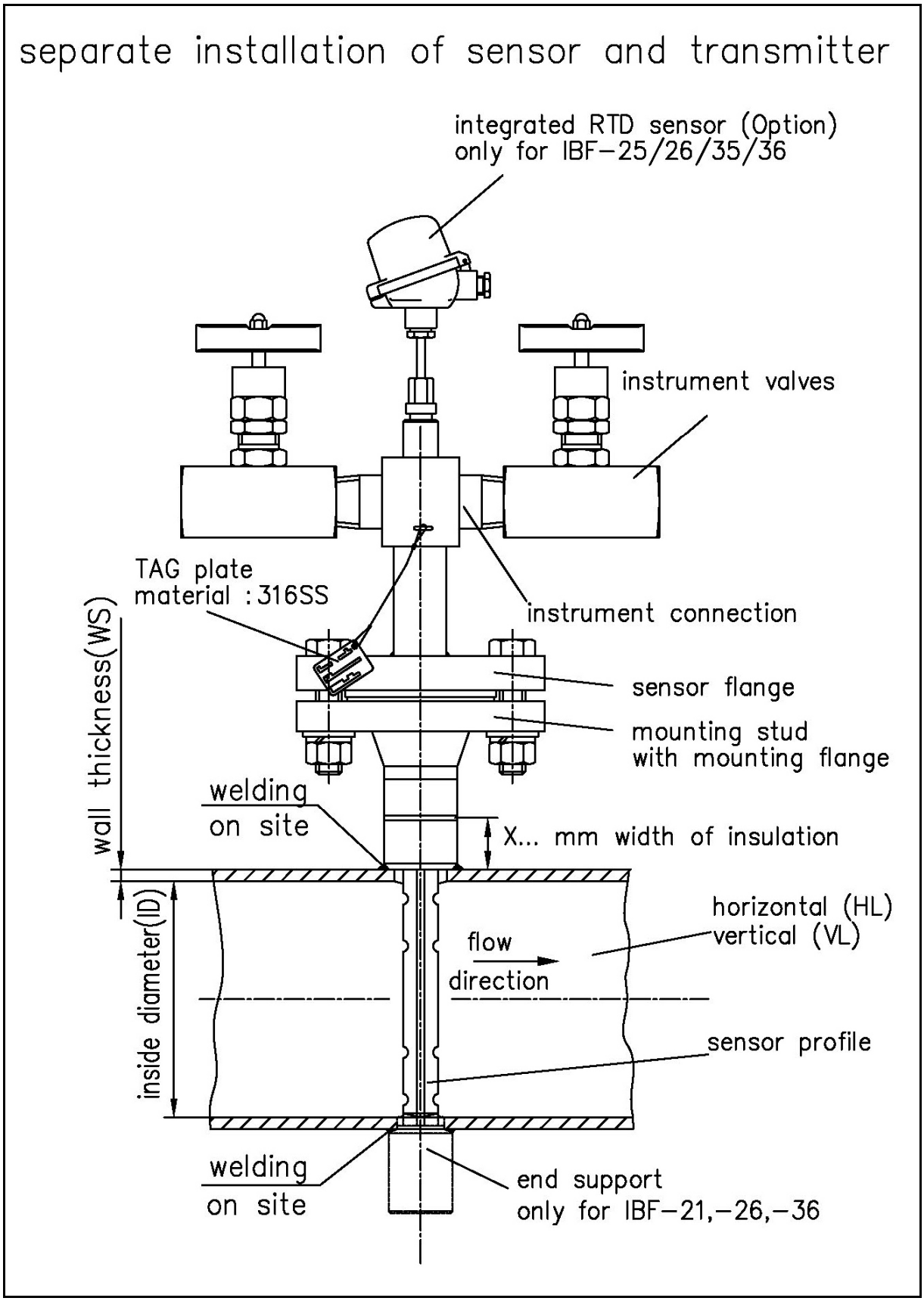
separate installation of sensor and transmitter
integrated RTD sensor (Option)
only for IBF-25/26/35/36
instrument valves
TAG plate
material : 316SS
instrument connection
wall thickness(WS)
sensor flange
mounting stud
with mounting flange
welding
on site
X... mm width of insulation
horizontal (HL)
vertical (VL)
flow
direction
inside diameter(ID)
sensor profile
welding
on site
end support
only for IBF-21,-26,-36

c.) Order Data for IBF-20/21/25/26/35/36/65/66

c.1) Sensor type:

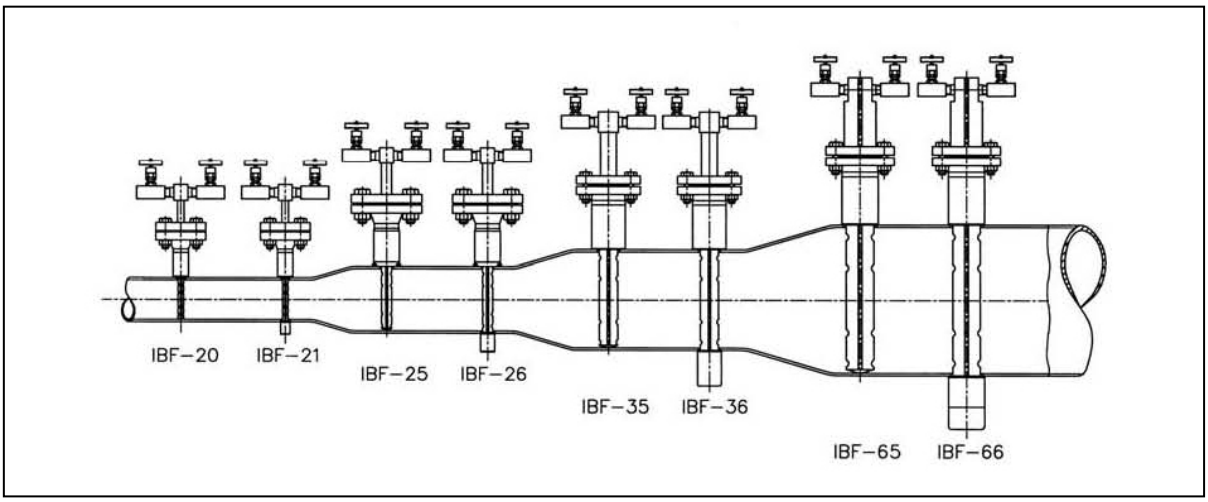

Pipe Size Inches	mm	Max. allowable volume flow m³/h Sensor Type IBF - 20	IBF -21	IBF -25	IBF -26	IBF -35	IBF -36	IBF -65	IBF -66
1 ½	DN 40	29	114	---	---	---	---	---	---
2	DN 50	59	161	---	---	---	---	---	---
2 ¼	DN 65	95	243	---	---	---	---	---	---
2 ½	DN 80	130	328	---	---	---	---	---	---
4	DN 100	179	439	205	544	---	---	---	---
5	DN 125	238	570	281	719	---	---	---	---
6	DN 150	---	---	358	894	---	---	---	---
8	DN 200	---	---	61	1242	---	---	---	---
10	DN 250	---	---	687	1623	---	---	---	---
12	DN 300	---	---	872	2034	1757	4204	2818	---
14	DN 350	---	---	1053	2433	2142	5067	3481	---
16	DN 400	---	---	1226	2818	2532	5942	4138	---
20	DN 500	---	---	1592	3627	3283	7611	5344	12233
24	DN 600	---	---	1949	4420	4052	9327	6794	15455
28	DN 700	---	---	2318	5237	4846	11106	8263	18723
32	DN 800	---	---	2701	6099	7937	12930	9665	21727
36	DN 900	---	---	---	7000	---	14790	---	24501
40	DN 1000	---	---	---	7921	---	16674	---	27182
48	DN 1200	---	---	---	9763	---	20450	---	32876
56	DN 1400	---	---	---	11569	---	24400	---	39177
64	DN 1600	---	---	---	13315	---	27987	---	46015
72	DN 1800	---	---	---	15040	---	31613	---	52029
80	DN 2000	---	---	---	---	---	35239	---	57999

These values are for water of ρ = 0,9982 kg/l SGU and at a temperature T = 20 °C. To calculate volumetric or mass flow of fluids with other densities see chapter 6 „Specifications of DP Sensors with WINFLOW“.

d.) Order Specification Itabar-Flow-Sensors, Series IBF

d.1) IBF-20/21

1. Type of Sensor			
IBF-20	without end support		
IBF-21	with end support		
2. Inside Diameter and Wall Thickness			
ID/WT	Inside diameter and wall thickness in mm (or inches), please specify		
3. Sensor Material			
S	316Ti (1.4571)		
X	A 182 F51 (1.4462) “Duplex”		
K	904L (1.4539)		
H	Hastelloy C4 (2.4610)		
Y	Incoloy 800 (1.4876)		
L	Inconel 600 (2.4816)		
M	Monel 400 (2.4360)		
T	B 348 Grade 2 (3.7035) “Titanium Grade 2”		
4. Sensor Flange (always identically to sensor material)			
SM	acc. DIN		
SA	acc. ANSI		
5. Flange Face			
1	acc. DIN		
2	ANSI RF		
3	ANSI RF SF (smooth finish)		
4	RTJ		
6. Pressure rating (PN/lbs), Material and nominal Size (DN / “) of Sensor Flange			
	Pressure rating	**Material**	**Nominal Size**
A01	PN 16 / 150 lbs	316Ti / 1.4571	DN25 / 1”
A02	PN 40	316Ti / 1.4571	DN25 / 1”
A03	PN63 / 300 lbs	316Ti / 1.4571	DN25 / 1”
A04	PN 100 / 600 lbs	316Ti / 1.4571	DN25 / 1”
A05	PN 160	316Ti / 1.4571	DN25 / 1”
A06	PN 250 / 1500 lbs	316Ti / 1.4571	DN25 / 1”
A07	PN 320	316Ti / 1.4571	DN25 / 1”
A08	PN 400 / 2500 lbs	316Ti / 1.4571	DN25 / 1”
A10	PN 16 / 150 lbs	Duplex / 1.4462	DN25 / 1”
A11	PN 40	Duplex / 1.4462	DN25 / 1”
A12	PN63 / 300 lbs	Duplex / 1.4462	DN25 / 1”
A13	PN 100 / 600 lbs	Duplex / 1.4462	DN25 / 1”
A14	PN 160	Duplex / 1.4462	DN25 / 1”
A15	PN 250 / 1500 lbs	Duplex / 1.4462	DN25 / 1”
A16	PN 320	Duplex / 1.4462	DN25 / 1”
A17	PN 400 / 2500 lbs	Duplex / 1.4462	DN25 / 1”
A20	PN 16 / 150 lbs	904L / 1.4539	DN25 / 1”
A21	PN 40	904L / 1.4539	DN25 / 1”
A22	PN63 / 300 lbs	904L / 1.4539	DN25 / 1”
A23	PN 100 / 600 lbs	904L / 1.4539	DN25 / 1”
A24	PN 160	904L / 1.4539	DN25 / 1”
A25	PN 250 / 1500 lbs	904L / 1.4539	DN25 / 1”
A26	PN 320	904L / 1.4539	DN25 / 1”
A27	PN 400 / 2500 lbs	904L / 1.4539	DN25 / 1”

Continued next page

6. Pressure rating (PN/lbs), Material and nominal Size (DN / “) of Sensor Flange (Continuation)			
	Pressure rating	**Material**	**Nominal Size**
A30	PN 16 / 150 lbs	Hastelloy C4	DN25 / 1”
A31	PN 40	Hastelloy C4	DN25 / 1”
A32	PN63 / 300 lbs	Hastelloy C4	DN25 / 1”
A33	PN 100 / 600 lbs	Hastelloy C4	DN25 / 1”
A34	PN 160	Hastelloy C4	DN25 / 1”
A35	PN 250 / 1500 lbs	Hastelloy C4	DN25 / 1”
A36	PN 320	Hastelloy C4	DN25 / 1”
A37	PN 400 / 2500 lbs	Hastelloy C4	DN25 / 1”
A40	PN 16 / 150 lbs	Incoloy 800	DN25 / 1”
A41	PN 40	Incoloy 800	DN25 / 1”
A42	PN63 / 300 lbs	Incoloy 800	DN25 / 1”
A43	PN 100 / 600 lbs	Incoloy 800	DN25 / 1”
A44	PN 160	Incoloy 800	DN25 / 1”
A45	PN 250 / 1500 lbs	Incoloy 800	DN25 / 1”
A46	PN 320	Incoloy 800	DN25 / 1”
A47	PN 400 / 2500 lbs	Incoloy 800	DN25 / 1”
A50	PN 16 / 150 lbs	Inconel 600	DN25 / 1”
A51	PN 40	Inconel 600	DN25 / 1”
A52	PN63 / 300 lbs	Inconel 600	DN25 / 1”
A53	PN 100 / 600 lbs	Inconel 600	DN25 / 1”
A54	PN 160	Inconel 600	DN25 / 1”
A55	PN 250 / 1500 lbs	Inconel 600	DN25 / 1”
A56	PN 320	Inconel 600	DN25 / 1”
A57	PN 400 / 2500 lbs	Inconel 600	DN25 / 1”
A60	PN 16 / 150 lbs	Monel 400	DN25 / 1”
A61	PN 40	Monel 400	DN25 / 1”
A62	PN63 / 300 lbs	Monel 400	DN25 / 1”
A63	PN 100 / 600 lbs	Monel 400	DN25 / 1”
A64	PN 160	Monel 400	DN25 / 1”
A65	PN 250 / 1500 lbs	Monel 400	DN25 / 1”
A66	PN 320	Monel 400	DN25 / 1”
A67	PN 400 / 2500 lbs	Monel 400	DN25 / 1”
A70	PN 16 / 150 lbs	Titanium Grade 2	DN25 / 1”
A71	PN 40	Titanium Grade 2	DN25 / 1”
A72	PN63 / 300 lbs	Titanium Grade 2	DN25 / 1”
A73	PN 100 / 600 lbs	Titanium Grade 2	DN25 / 1”
A74	PN 160	Titanium Grade 2	DN25 / 1”
A75	PN 250 / 1500 lbs	Titanium Grade 2	DN25 / 1”
A76	PN 320	Titanium Grade 2	DN25 / 1”
A77	PN 400 / 2500 lbs	Titanium Grade 2	DN25 / 1”

7. Mounting Stud (material of stud has to be identical / resp. weldable to the pipe material)	
0	without
R	mounting stud with flange (standard)
W	weldolet-stud with flange
8. Mounting Stud Flange (size and pressure rating has to be identical to sensor flange)	
0	without
M	acc. DIN, form C
A	acc. ANSI, RF
F	acc. ANSI, SF (smooth finish)
T	acc. ANSI, RTJ

Continued next page

9. Mounting Stud material, with flange, (max pressure rating)	
0	without

	Material	Pressure rating	Size
C1	C.S.	PN 16 / 150 lbs	DN 25 / 1”
S1	316Ti	PN 16 / 150 lbs	DN 25 / 1”
X1	Duplex	PN 16 / 150 lbs	DN 25 / 1”
K1	904L (1.4539)	PN 16 / 150 lbs	DN 25 / 1”
H1	Hastelloy C4	PN 16 / 150 lbs	DN 25 / 1”
D1	Incoloy 800	PN 16 / 150 lbs	DN 25 / 1”
L1	Inconel 600	PN 16 / 150 lbs	DN 25 / 1”
M1	Monel 400	PN 16 / 150 lbs	DN 25 / 1”
T1	Titanium Grade 2	PN 16 / 150 lbs	DN 25 / 1”
C2	C.S.	PN 40	DN 25 / 1”
S2	316Ti	PN 40	DN 25 / 1”
X2	Duplex	PN 40	DN 25 / 1”
K2	904L (1.4539)	PN 40	DN 25 / 1”
H2	Hastelloy C4	PN 40	DN 25 / 1”
D2	Incoloy 800	PN 40	DN 25 / 1”
L2	Inconel 600	PN 40	DN 25 / 1”
M2	Monel 400	PN 40	DN 25 / 1”
T2	Titanium Grade 2	PN 40	DN 25 / 1”
C3	C.S.	PN 63 / 300 lbs	DN 25 / 1”
S3	316Ti	PN 63 / 300 lbs	DN 25 / 1”
X3	Duplex	PN 63 / 300 lbs	DN 25 / 1”
K3	904L (1.4539)	PN 63 / 300 lbs	DN 25 / 1”
H3	Hastelloy C4	PN 63 / 300 lbs	DN 25 / 1”
D3	Incoloy 800	PN 63 / 300 lbs	DN 25 / 1”
L3	Inconel 600	PN 63 / 300 lbs	DN 25 / 1”
M3	Monel 400	PN 63 / 300 lbs	DN 25 / 1”
T3	Titanium Grade 2	PN 63 / 300 lbs	DN 25 / 1”
C4	C.S.	PN 100 / 600 lbs	DN 25 / 1”
S4	316Ti	PN 100 / 600 lbs	DN 25 / 1”
X4	Duplex	PN 100 / 600 lbs	DN 25 / 1”
K4	904L (1.4539)	PN 100 / 600 lbs	DN 25 / 1”
H4	Hastelloy C4	PN 100 / 600 lbs	DN 25 / 1”
D4	Incoloy 800	PN 100 / 600 lbs	DN 25 / 1”
L4	Inconel 600	PN 100 / 600 lbs	DN 25 / 1”
M4	Monel 400	PN 100 / 600 lbs	DN 25 / 1”
T4	Titanium Grade 2	PN 100 / 600 lbs	DN 25 / 1”
C5	C.S.	PN 160	DN 25 / 1”
S5	316Ti	PN 160	DN 25 / 1”
X5	Duplex	PN 160	DN 25 / 1”
K5	904L (1.4539)	PN 160	DN 25 / 1”
H5	Hastelloy C4	PN 160	DN 25 / 1”
D5	Incoloy 800	PN 160	DN 25 / 1”
L5	Inconel 600	PN 160	DN 25 / 1”
M5	Monel 400	PN 160	DN 25 / 1”
T5	Titanium Grade 2	PN 160	DN 25 / 1”

Continued next page

9. Mounting Stud material, with flange, (max pressure rating) (Continuation)			
	Material	**Pressure rating**	**Size**
C6	C.S.	PN 250 / 1500 lbs	DN 25 / 1”
S6	316Ti	PN 250 / 1500 lbs	DN 25 / 1”
X6	Duplex	PN 250 / 1500 lbs	DN 25 / 1”
K6	904L (1.4539)	PN 250 / 1500 lbs	DN 25 / 1”
H6	Hastelloy C4	PN 250 / 1500 lbs	DN 25 / 1”
D6	Incoloy 800	PN 250 / 1500 lbs	DN 25 / 1”
L6	Inconel 600	PN 250 / 1500 lbs	DN 25 / 1”
M6	Monel 400	PN 250 / 1500 lbs	DN 25 / 1”
T6	Titanium Grade 2	PN 250 / 1500 lbs	DN 25 / 1”
C7	C.S.	PN 320	DN 25 / 1”
S7	316Ti	PN 320	DN 25 / 1”
X7	Duplex	PN 320	DN 25 / 1”
K7	904L (1.4539)	PN 320	DN 25 / 1”
H7	Hastelloy C4	PN 320	DN 25 / 1”
D7	Incoloy 800	PN 320	DN 25 / 1”
L7	Inconel 600	PN 320	DN 25 / 1”
M7	Monel 400	PN 320	DN 25 / 1”
T7	Titanium Grade 2	PN 320	DN 25 / 1”
C8	C.S.	PN 400 / 2500 lbs	DN 25 / 1”
S8	316Ti	PN 400 / 2500 lbs	DN 25 / 1”
X8	Duplex	PN 400 / 2500 lbs	DN 25 / 1”
K8	904L (1.4539)	PN 400 / 2500 lbs	DN 25 / 1”
H8	Hastelloy C4	PN 400 / 2500 lbs	DN 25 / 1”
D8	Incoloy 800	PN 400 / 2500 lbs	DN 25 / 1”
L8	Inconel 600	PN 400 / 2500 lbs	DN 25 / 1”
M8	Monel 400	PN 400 / 2500 lbs	DN 25 / 1”
T8	Titanium Grade 2	PN 400 / 2500 lbs	DN 25 / 1”

10. End Support (only IBF-21)	
0	without end support
C	CS
S	316Ti (1.4571)
X	Duplex (1.4462)
K	904L (1.4539)
M	Monel 400
H	Hastelloy C4
D	Incoloy 800
L	Inconel 600
T	Titanium Grade 2
11. Insulation	
KI	without
X..	Thickness of insulation in mm (Please advise!)
12. Pipe run at place of installation	
HL	horizontal
VL	vertical
13. Process connection	
	Please see page 101
14. Instrument valves	
	Please see page 101

Order key IBF-20/21:

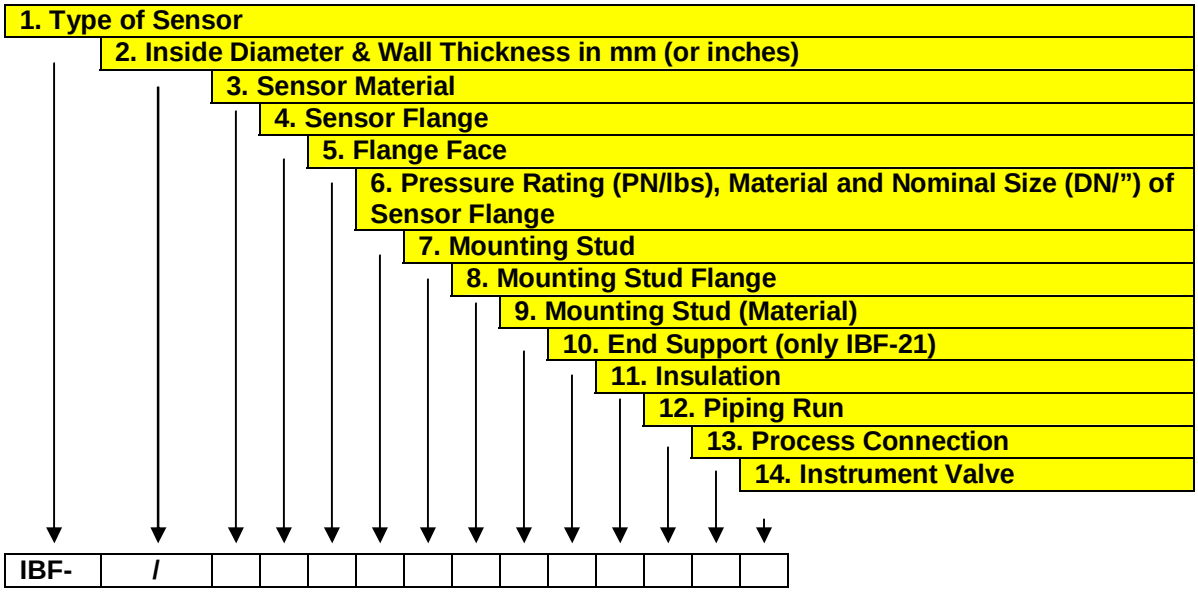

d.2) IBF-25/26

1. Type of Sensor			
IBF-25	without end support		
IBF-26	with end support		
2. Inside Diameter and Wall Thickness			
ID/WT	Inside diameter and wall thickness in mm (or inches), please specify		
3. Sensor Material			
S	316Ti (1.4571)		
X	A 182 F51 (1.4462) “Duplex”		
K	904L (1.4539)		
H	Hastelloy C4 (2.4610)		
Y	Incoloy 800 (1.4876)		
L	Inconel 600 (2.4816)		
M	Monel 400 (2.4360)		
D	PVDF **(max. pressure 6 bar, DN 100 up to DN 1200)**		
T	B 348 Grade 2 (3.7035) “Titanium Grade 2”		
4. Sensor Flange (always identically to sensor material)			
SM	acc. DIN		
SA	acc. ANSI		
5. Flange Face			
1	acc. DIN		
2	ANSI RF		
3	ANSI RF SF (smooth finish)		
4	RTJ		
6. Pressure rating (PN/lbs), Material and nominal Size (DN / “) of Sensor Flange			
	Pressure rating	**Material**	**Nominal Size**
B01	PN 16 / 150 lbs	316Ti / 1.4571	DN32 / 1 ½”
B02	PN 40	316Ti / 1.4571	DN32 / 1 ½”
B03	PN63 / 300 lbs	316Ti / 1.4571	DN40 / 1 ½”
B04	PN 100 / 600 lbs	316Ti / 1.4571	DN40 / 1 ½”
B05	PN 160	316Ti / 1.4571	DN40 / 1 ½”
B06	PN 250 / 1500 lbs	316Ti / 1.4571	DN40 / 1 ½”
B07	PN 320	316Ti / 1.4571	DN40 / 1 ½”
B08	PN 400 / 2500 lbs	316Ti / 1.4571	DN40 / 1 ½”
B10	PN 16 / 150 lbs	Duplex / 1.4462	DN32 / 1 ½”
B11	PN 40	Duplex / 1.4462	DN32 / 1 ½”
B12	PN63 / 300 lbs	Duplex / 1.4462	DN40 / 1 ½”
B13	PN 100 / 600 lbs	Duplex / 1.4462	DN40 / 1 ½”
B14	PN 160	Duplex / 1.4462	DN40 / 1 ½”
B15	PN 250 / 1500 lbs	Duplex / 1.4462	DN40 / 1 ½”
B16	PN 320	Duplex / 1.4462	DN40 / 1 ½”
B17	PN 400 / 2500 lbs	Duplex / 1.4462	DN40 / 1 ½”
B20	PN 16 / 150 lbs	904L / 1.4539	DN32 / 1 ½”
B21	PN 40	904L / 1.4539	DN32 / 1 ½”
B22	PN63 / 300 lbs	904L / 1.4539	DN40 / 1 ½”
B23	PN 100 / 600 lbs	904L / 1.4539	DN40 / 1 ½”
B24	PN 160	904L / 1.4539	DN40 / 1 ½”
B25	PN 250 / 1500 lbs	904L / 1.4539	DN40 / 1 ½”
B26	PN 320	904L / 1.4539	DN40 / 1 ½”
B27	PN 400 / 2500 lbs	904L / 1.4539	DN40 / 1 ½”

Continued next page

6. Pressure rating (PN/lbs), Material and nominal Size (DN / “) of Sensor Flange (Continuation)			
	Pressure rating	**Material**	**Nominal Size**
B30	PN 16 / 150 lbs	Hastelloy C4	DN32 / 1 ½”
B31	PN 40	Hastelloy C4	DN32 / 1 ½”
B32	PN63 / 300 lbs	Hastelloy C4	DN40 / 1 ½”
B33	PN 100 / 600 lbs	Hastelloy C4	DN40 / 1 ½”
B34	PN 160	Hastelloy C4	DN40 / 1 ½”
B35	PN 250 / 1500 lbs	Hastelloy C4	DN40 / 1 ½”
B36	PN 320	Hastelloy C4	DN40 / 1 ½”
B37	PN 400 / 2500 lbs	Hastelloy C4	DN40 / 1 ½”
B40	PN 16 / 150 lbs	Incoloy 800	DN32 / 1 ½”
B41	PN 40	Incoloy 800	DN32 / 1 ½”
B42	PN63 / 300 lbs	Incoloy 800	DN40 / 1 ½”
B43	PN 100 / 600 lbs	Incoloy 800	DN40 / 1 ½”
B44	PN 160	Incoloy 800	DN40 / 1 ½”
B45	PN 250 / 1500 lbs	Incoloy 800	DN40 / 1 ½”
B46	PN 320	Incoloy 800	DN40 / 1 ½”
B47	PN 400 / 2500 lbs	Incoloy 800	DN40 / 1 ½”
B50	PN 16 / 150 lbs	Inconel 600	DN32 / 1 ½”
B51	PN 40	Inconel 600	DN32 / 1 ½”
B52	PN63 / 300 lbs	Inconel 600	DN40 / 1 ½”
B53	PN 100 / 600 lbs	Inconel 600	DN40 / 1 ½”
B54	PN 160	Inconel 600	DN40 / 1 ½”
B55	PN 250 / 1500 lbs	Inconel 600	DN40 / 1 ½”
B56	PN 320	Inconel 600	DN40 / 1 ½”
B57	PN 400 / 2500 lbs	Inconel 600	DN40 / 1 ½”
B60	PN 16 / 150 lbs	Monel 400	DN32 / 1 ½”
B61	PN 40	Monel 400	DN32 / 1 ½”
B62	PN63 / 300 lbs	Monel 400	DN40 / 1 ½”
B63	PN 100 / 600 lbs	Monel 400	DN40 / 1 ½”
B64	PN 160	Monel 400	DN40 / 1 ½”
B65	PN 250 / 1500 lbs	Monel 400	DN40 / 1 ½”
B66	PN 320	Monel 400	DN40 / 1 ½”
B67	PN 400 / 2500 lbs	Monel 400	DN40 / 1 ½”
B70	PN16 / 150 lbs	PVDF, max.pressure 6bar	DN32 / 1 ½”
B80	PN 16 / 150 lbs	Titanium Grade 2	DN32 / 1 ½”
B81	PN 40	Titanium Grade 2	DN32 / 1 ½”
B82	PN63 / 300 lbs	Titanium Grade 2	DN40 / 1 ½”
B83	PN 100 / 600 lbs	Titanium Grade 2	DN40 / 1 ½”
B84	PN 160	Titanium Grade 2	DN40 / 1 ½”
B85	PN 250 / 1500 lbs	Titanium Grade 2	DN40 / 1 ½”
B86	PN 320	Titanium Grade 2	DN40 / 1 ½”
B87	PN 400 / 2500 lbs	Titanium Grade 2	DN40 / 1 ½”

7. Mounting Stud (material of stud has to be identical / resp. weldable to the pipe material)	
0	without
R	mounting stud with flange (standard)
W	weldolet-stud with flange
8. Mounting Stud Flange (size and pressure rating has to be identical to sensor flange)	
0	without
M	acc. DIN, form C
A	acc. ANSI, RF
F	acc. ANSI, SF (smooth finish)
T	acc. ANSI, RTJ
S	Saddle flange, size of flange: DN40, material GGG-40 EWS-coated, without retainer

Continued next page

8. Mounting Stud Flange (identical to Sensor Flange) (Continuation)	
V	Saddle flange with retainer, material: rustproof steel, outside diameter pipe: 87…470 mm: gasket: NBR
3	Saddle flange with retainer, material 1.4301, outside diameter pipe: 75…582 mm, gasket: NBR
Z	Saddle flange with retainer, material 1.4301, for asbestos-cement pipe, outside diameter pipe: 97…494 mm, gasket: NBR
9. Mounting Stud material, with flange, (max pressure rating)	
0	Without

	Material	Pressure rating	Size
C1	C.S.	PN 16 / 150 lbs	DN 32 / 1 ½”
S1	316Ti	PN 16 / 150 lbs	DN 32 / 1 ½”
X1	Duplex	PN 16 / 150 lbs	DN 32 / 1 ½”
K1	904L (1.4539)	PN 16 / 150 lbs	DN 32 / 1 ½”
H1	Hastelloy C4	PN 16 / 150 lbs	DN 32 / 1 ½”
D1	Incoloy 800	PN 16 / 150 lbs	DN 32 / 1 ½”
L1	Inconel 600	PN 16 / 150 lbs	DN 32 / 1 ½”
M1	Monel 400	PN 16 / 150 lbs	DN 32 / 1 ½”
T1	Titanium Grade 2	PN 16 / 150 lbs	DN 32 / 1 ½”
C2	C.S.	PN 40	DN 32 / 1 ½”
S2	316Ti	PN 40	DN 32 / 1 ½”
X2	Duplex	PN 40	DN 32 / 1 ½”
K2	904L (1.4539)	PN 40	DN 32 / 1 ½”
H2	Hastelloy C4	PN 40	DN 32 / 1 ½”
D2	Incoloy 800	PN 40	DN 32 / 1 ½”
L2	Inconel 600	PN 40	DN 32 / 1 ½”
M2	Monel 400	PN 40	DN 32 / 1 ½”
T2	Titanium Grade 2	PN 40	DN 32 / 1 ½”
C3	C.S.	PN 63 / 300 lbs	DN 40 / 1 ½”
S3	316Ti	PN 63 / 300 lbs	DN 40 / 1 ½”
X3	Duplex	PN 63 / 300 lbs	DN 40 / 1 ½”
K3	904L (1.4539)	PN 63 / 300 lbs	DN 40 / 1 ½”
H3	Hastelloy C4	PN 63 / 300 lbs	DN 40 / 1 ½”
D3	Incoloy 800	PN 63 / 300 lbs	DN 40 / 1 ½”
L3	Inconel 600	PN 63 / 300 lbs	DN 40 / 1 ½”
M3	Monel 400	PN 63 / 300 lbs	DN 40 / 1 ½”
T3	Titanium Grade 2	PN 63 / 300 lbs	DN 40 / 1 ½”
C4	C.S.	PN 100 / 600 lbs	DN 40 / 1 ½”
S4	316Ti	PN 100 / 600 lbs	DN 40 / 1 ½”
X4	Duplex	PN 100 / 600 lbs	DN 40 / 1 ½”
K4	904L (1.4539)	PN 100 / 600 lbs	DN 40 / 1 ½”
H4	Hastelloy C4	PN 100 / 600 lbs	DN 40 / 1 ½”
D4	Incoloy 800	PN 100 / 600 lbs	DN 40 / 1 ½”
L4	Inconel 600	PN 100 / 600 lbs	DN 40 / 1 ½”
M4	Monel 400	PN 100 / 600 lbs	DN 40 / 1 ½”
T4	Titanium Grade 2	PN 100 / 600 lbs	DN 40 / 1 ½”
C5	C.S.	PN 160	DN 40 / 1 ½”
S5	316Ti	PN 160	DN 40 / 1 ½”
X5	Duplex	PN 160	DN 40 / 1 ½”
K5	904L (1.4539)	PN 160	DN 40 / 1 ½”
H5	Hastelloy C4	PN 160	DN 40 / 1 ½”
D5	Incoloy 800	PN 160	DN 40 / 1 ½”
L5	Inconel 600	PN 160	DN 40 / 1 ½”
M5	Monel 400	PN 160	DN 40 / 1 ½”
T5	Titanium Grade 2	PN 160	DN 40 / 1 ½”

Continued next page

9. Mounting Stud material, with flange, (max pressure rating) (Continuation)			
	Material	**Pressure rating**	**Size**
C6	C.S.	PN 250 / 1500 lbs	DN 40 / 1 ½”
S6	316Ti	PN 250 / 1500 lbs	DN 40 / 1 ½”
X6	Duplex	PN 250 / 1500 lbs	DN 40 / 1 ½”
K6	904L (1.4539)	PN 250 / 1500 lbs	DN 40 / 1 ½”
H6	Hastelloy C4	PN 250 / 1500 lbs	DN 40 / 1 ½”
D6	Incoloy 800	PN 250 / 1500 lbs	DN 40 / 1 ½”
L6	Inconel 600	PN 250 / 1500 lbs	DN 40 / 1 ½”
M6	Monel 400	PN 250 / 1500 lbs	DN 40 / 1 ½”
T6	Titanium Grade 2	PN 250 / 1500 lbs	DN 40 / 1 ½”
C7	C.S.	PN 320	DN 40 / 1 ½”
S7	316Ti	PN 320	DN 40 / 1 ½”
X7	Duplex	PN 320	DN 40 / 1 ½”
K7	904L (1.4539)	PN 320	DN 40 / 1 ½”
H7	Hastelloy C4	PN 320	DN 40 / 1 ½”
D7	Incoloy 800	PN 320	DN 40 / 1 ½”
L7	Inconel 600	PN 320	DN 40 / 1 ½”
M7	Monel 400	PN 320	DN 40 / 1 ½”
T7	Titanium Grade 2	PN 320	DN 40 / 1 ½”
C8	C.S.	PN 400 / 2500 lbs	DN 40 / 1 ½”
S8	316Ti	PN 400 / 2500 lbs	DN 40 / 1 ½”
X8	Duplex	PN 400 / 2500 lbs	DN 40 / 1 ½”
K8	904L (1.4539)	PN 400 / 2500 lbs	DN 40 / 1 ½”
H8	Hastelloy C4	PN 400 / 2500 lbs	DN 40 / 1 ½”
D8	Incoloy 800	PN 400 / 2500 lbs	DN 40 / 1 ½”
L8	Inconel 600	PN 400 / 2500 lbs	DN 40 / 1 ½”
M8	Monel 400	PN 400 / 2500 lbs	DN 40 / 1 ½”
T8	Titanium Grade 2	PN 400 / 2500 lbs	DN 40 / 1 ½”

10. End Support (only IBF-26)	
0	without end support
C	CS
S	316Ti (1.4571)
X	Duplex (1.4462)
K	904L (1.4539)
M	Monel 400
H	Hastelloy C4
D	Incoloy 800
L	Inconel 600
V	PVDF (max. PN6)
T	Titanium Grade 2
11. Insulation	
KI	without
X..	Thickness of insulation in mm (Please advise!)
12. Pipe run at place of installation	
HL	horizontal
VL	vertical
13. Integrated PT-100 / RTD	
T0	without
TA	3-wire
TB	2-wire, with Ex-approval
14. Head transmitter for RTD	
	Please see page 45
15. Process connection	
	Please see page 101
16. Instrument valves	
	Please see page 101

Order key IBF-25/26:

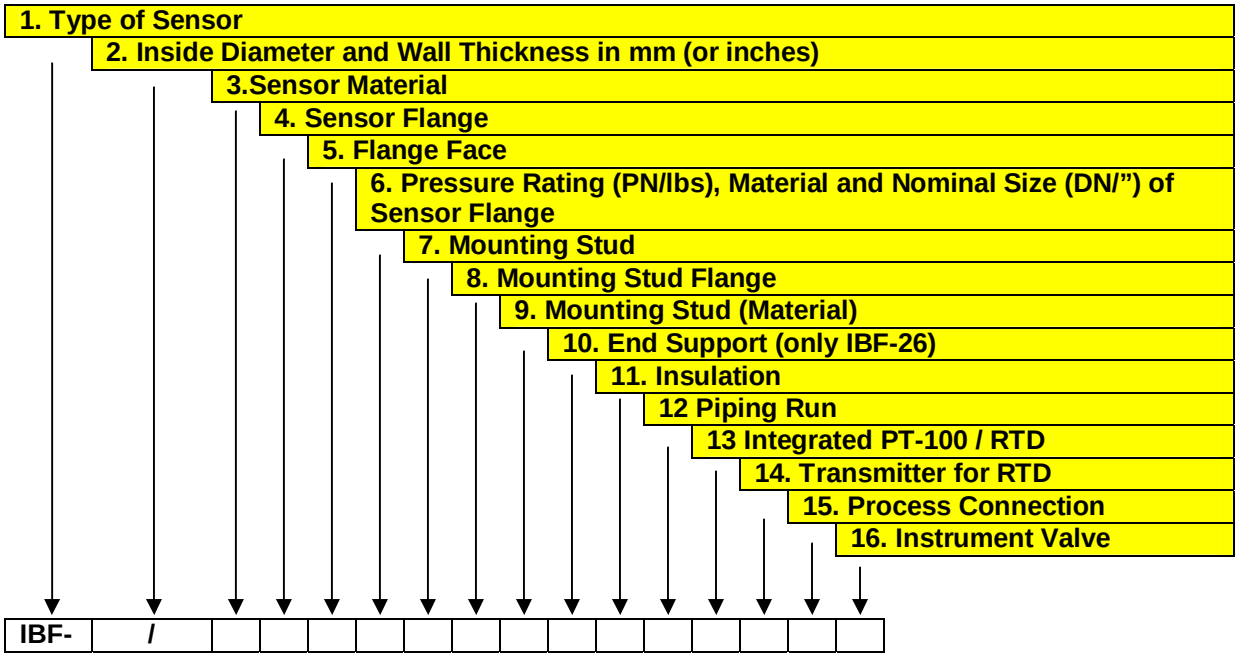

d.3) IBF-35/36

1. Type of Sensor			
IBF-35	without end support		
IBF-36	with end support		
2. Inside Diameter and Wall Thickness			
ID/WT	Inside diameter and wall thickness in mm (or inches), please specify		
3. Sensor Material			
S	316Ti (1.4571)		
X	A 182 F51 (1.4462) “Duplex”		
K	904L (1.4539)		
H	Hastelloy C4 (2.4610)		
Y	Incoloy 800 (1.4876)		
L	Inconel 600 (2.4816)		
M	Monel 400 (2.4360)		
D	PVDF **(max. pressure 6 bar, up to DN 1200)**		
T	B 348 Grade 2 (3.7035) “Titanium Grade 2”		
4. Sensor Flange (always identically to sensor material)			
SM	acc. DIN		
SA	acc. ANSI		
5. Flange Face			
1	acc. DIN		
2	ANSI RF		
3	ANSI RF SF (smooth finish)		
4	RTJ		
6. Pressure rating (PN/lbs), Material and nominal Size (DN / “) of Sensor Flange			
	Pressure rating	**Material**	**Nominal Size**
C01	PN 16 / 150 lbs	316Ti / 1.4571	DN50 / 2”
C02	PN 40	316Ti / 1.4571	DN50 / 2”
C03	PN63 / 300 lbs	316Ti / 1.4571	DN50 / 2”
C04	PN 100 / 600 lbs	316Ti / 1.4571	DN50 / 2”
C05	PN 160	316Ti / 1.4571	DN50 / 2”
C06	PN 250 / 1500 lbs	316Ti / 1.4571	DN50 / 2”
C07	PN 320	316Ti / 1.4571	DN50 / 2”
C08	PN 400 / 2500 lbs	316Ti / 1.4571	DN50 / 2”
C10	PN 16 / 150 lbs	Duplex / 1.4462	DN50 / 2”
C11	PN 40	Duplex / 1.4462	DN50 / 2”
C12	PN63 / 300 lbs	Duplex / 1.4462	DN50 / 2”
C13	PN 100 / 600 lbs	Duplex / 1.4462	DN50 / 2”
C14	PN 160	Duplex / 1.4462	DN50 / 2”
C15	PN 250 / 1500 lbs	Duplex / 1.4462	DN50 / 2”
C16	PN 320	Duplex / 1.4462	DN50 / 2”
C17	PN 400 / 2500 lbs	Duplex / 1.4462	DN50 / 2”
C20	PN 16 / 150 lbs	904L / 1.4539	DN50 / 2”
C21	PN 40	904L / 1.4539	DN50 / 2”
C22	PN63 / 300 lbs	904L / 1.4539	DN50 / 2”
C23	PN 100 / 600 lbs	904L / 1.4539	DN50 / 2”
C24	PN 160	904L / 1.4539	DN50 / 2”
C25	PN 250 / 1500 lbs	904L / 1.4539	DN50 / 2”
C26	PN 320	904L / 1.4539	DN50 / 2”
C27	PN 400 / 2500 lbs	904L / 1.4539	DN50 / 2”

Continued next page

6. Pressure rating (PN/lbs), Material and nominal Size (DN / “) of Sensor Flange (Continuation)			
	Pressure rating	**Material**	**Nominal Size**
C30	PN 16 / 150 lbs	Hastelloy C4	DN50 / 2”
C31	PN 40	Hastelloy C4	DN50 / 2”
C32	PN63 / 300 lbs	Hastelloy C4	DN50 / 2”
C33	PN 100 / 600 lbs	Hastelloy C4	DN50 / 2”
C34	PN 160	Hastelloy C4	DN50 / 2”
C35	PN 250 / 1500 lbs	Hastelloy C4	DN50 / 2”
C36	PN 320	Hastelloy C4	DN50 / 2”
C37	PN 400 / 2500 lbs	Hastelloy C4	DN50 / 2”
C40	PN 16 / 150 lbs	Incoloy 800	DN50 / 2”
C41	PN 40	Incoloy 800	DN50 / 2”
C42	PN63 / 300 lbs	Incoloy 800	DN50 / 2”
C43	PN 100 / 600 lbs	Incoloy 800	DN50 / 2”
C44	PN 160	Incoloy 800	DN50 / 2”
C45	PN 250 / 1500 lbs	Incoloy 800	DN50 / 2”
C46	PN 320	Incoloy 800	DN50 / 2”
C47	PN 400 / 2500 lbs	Incoloy 800	DN50 / 2”
C50	PN 16 / 150 lbs	Inconel 600	DN50 / 2”
C51	PN 40	Inconel 600	DN50 / 2”
C52	PN63 / 300 lbs	Inconel 600	DN50 / 2”
C53	PN 100 / 600 lbs	Inconel 600	DN50 / 2”
C54	PN 160	Inconel 600	DN50 / 2”
C55	PN 250 / 1500 lbs	Inconel 600	DN50 / 2”
C56	PN 320	Inconel 600	DN50 / 2”
C57	PN 400 / 2500 lbs	Inconel 600	DN50 / 2”
C60	PN 16 / 150 lbs	Monel 400	DN50 / 2”
C61	PN 40	Monel 400	DN50 / 2”
C62	PN63 / 300 lbs	Monel 400	DN50 / 2”
C63	PN 100 / 600 lbs	Monel 400	DN50 / 2”
C64	PN 160	Monel 400	DN50 / 2”
C65	PN 250 / 1500 lbs	Monel 400	DN50 / 2”
C66	PN 320	Monel 400	DN50 / 2”
C67	PN 400 / 2500 lbs	Monel 400	DN50 / 2”
C70	PN16 / 150 lbs	PVDF, max.pressure 6bar	DN50 / 2”
C80	PN 16 / 150 lbs	Titanium Grade 2	DN50 / 2”
C81	PN 40	Titanium Grade 2	DN50 / 2”
C82	PN63 / 300 lbs	Titanium Grade 2	DN50 / 2”
C83	PN 100 / 600 lbs	Titanium Grade 2	DN50 / 2”
C84	PN 160	Titanium Grade 2	DN50 / 2”
C85	PN 250 / 1500 lbs	Titanium Grade 2	DN50 / 2”
C86	PN 320	Titanium Grade 2	DN50 / 2”
C87	PN 400 / 2500 lbs	Titanium Grade 2	DN50 / 2”

7. Mounting Stud (material of stud has to be identical / resp. weldable to the pipe material)	
0	without
R	mounting stud with flange (standard)
W	weldolet-stud with flange
8. Mounting Stud Flange (size and pressure rating has to be identical to sensor flange)	
0	without
M	acc. DIN, form C
A	acc. ANSI, RF
F	acc. ANSI, SF (smooth finish)
T	acc. ANSI, RTJ
S	Saddle flange, size of flange: DN40, material GGG-40 EWS-coated, without retainer

Continued next page

8. Mounting Stud Flange (identical to Sensor Flange) (Continuation)	
V	Saddle flange with retainer, material: rustproof steel, outside diameter pipe: 87…470 mm: gasket: NBR
3	Saddle flange with retainer, material 1.4301, outside diameter pipe: 75…582 mm, gasket: NBR
Z	Saddle flange with retainer, material 1.4301, for asbestos-cement pipe, outside diameter pipe: 97…494 mm, gasket: NBR
9. Mounting Stud material, with flange, (max pressure rating)	
0	without

	Material	Pressure rating	Size
C1	C.S.	PN 16 / 150 lbs	DN50 / 2”
S1	316Ti	PN 16 / 150 lbs	DN50 / 2”
X1	Duplex	PN 16 / 150 lbs	DN50 / 2”
K1	904L (1.4539)	PN 16 / 150 lbs	DN50 / 2”
H1	Hastelloy C4	PN 16 / 150 lbs	DN50 / 2”
D1	Incoloy 800	PN 16 / 150 lbs	DN50 / 2”
L1	Inconel 600	PN 16 / 150 lbs	DN50 / 2”
M1	Monel 400	PN 16 / 150 lbs	DN50 / 2”
T1	Titanium Grade 2	PN 16 / 150 lbs	DN50 / 2”
C2	C.S.	PN 40	DN50 / 2”
S2	316Ti	PN 40	DN50 / 2”
X2	Duplex	PN 40	DN50 / 2”
K2	904L (1.4539)	PN 40	DN50 / 2”
H2	Hastelloy C4	PN 40	DN50 / 2”
D2	Incoloy 800	PN 40	DN50 / 2”
L2	Inconel 600	PN 40	DN50 / 2”
M2	Monel 400	PN 40	DN50 / 2”
T2	Titanium Grade 2	PN 40	DN50 / 2”
C3	C.S.	PN 63 / 300 lbs	DN50 / 2”
S3	316Ti	PN 63 / 300 lbs	DN50 / 2”
X3	Duplex	PN 63 / 300 lbs	DN50 / 2”
K3	904L (1.4539)	PN 63 / 300 lbs	DN50 / 2”
H3	Hastelloy C4	PN 63 / 300 lbs	DN50 / 2”
D3	Incoloy 800	PN 63 / 300 lbs	DN50 / 2”
L3	Inconel 600	PN 63 / 300 lbs	DN50 / 2”
M3	Monel 400	PN 63 / 300 lbs	DN50 / 2”
T3	Titanium Grade 2	PN 63 / 300 lbs	DN50 / 2”
C4	C.S.	PN 100 / 600 lbs	DN50 / 2”
S4	316Ti	PN 100 / 600 lbs	DN50 / 2”
X4	Duplex	PN 100 / 600 lbs	DN50 / 2”
K4	904L (1.4539)	PN 100 / 600 lbs	DN50 / 2”
H4	Hastelloy C4	PN 100 / 600 lbs	DN50 / 2”
D4	Incoloy 800	PN 100 / 600 lbs	DN50 / 2”
L4	Inconel 600	PN 100 / 600 lbs	DN50 / 2”
M4	Monel 400	PN 100 / 600 lbs	DN50 / 2”
T4	Titanium Grade 2	PN 100 / 600 lbs	DN50 / 2”
C5	C.S.	PN 160	DN50 / 2”
S5	316Ti	PN 160	DN50 / 2”
X5	Duplex	PN 160	DN50 / 2”
K5	904L (1.4539)	PN 160	DN50 / 2”
H5	Hastelloy C4	PN 160	DN50 / 2”
D5	Incoloy 800	PN 160	DN50 / 2”
L5	Inconel 600	PN 160	DN50 / 2”
M5	Monel 400	PN 160	DN50 / 2”
T5	Titanium Grade 2	PN 160	DN50 / 2”

Continued next page

9. Mounting Stud material, with flange, (max pressure rating) (Continuation)			
	Material	**Pressure rating**	**Size**
C6	C.S.	PN 250 / 1500 lbs	DN50 / 2”
S6	316Ti	PN 250 / 1500 lbs	DN50 / 2”
X6	Duplex	PN 250 / 1500 lbs	DN50 / 2”
K6	904L (1.4539)	PN 250 / 1500 lbs	DN50 / 2”
H6	Hastelloy C4	PN 250 / 1500 lbs	DN50 / 2”
D6	Incoloy 800	PN 250 / 1500 lbs	DN50 / 2”
L6	Inconel 600	PN 250 / 1500 lbs	DN50 / 2”
M6	Monel 400	PN 250 / 1500 lbs	DN50 / 2”
T6	Titanium Grade 2	PN 250 / 1500 lbs	DN50 / 2”
C7	C.S.	PN 320	DN50 / 2”
S7	316Ti	PN 320	DN50 / 2”
X7	Duplex	PN 320	DN50 / 2”
K7	904L (1.4539)	PN 320	DN50 / 2”
H7	Hastelloy C4	PN 320	DN50 / 2”
D7	Incoloy 800	PN 320	DN50 / 2”
L7	Inconel 600	PN 320	DN50 / 2”
M7	Monel 400	PN 320	DN50 / 2”
T7	Titanium Grade 2	PN 320	DN50 / 2”
C8	C.S.	PN 400 / 2500 lbs	DN50 / 2”
S8	316Ti	PN 400 / 2500 lbs	DN50 / 2”
X8	Duplex	PN 400 / 2500 lbs	DN50 / 2”
K8	904L (1.4539)	PN 400 / 2500 lbs	DN50 / 2”
H8	Hastelloy C4	PN 400 / 2500 lbs	DN50 / 2”
D8	Incoloy 800	PN 400 / 2500 lbs	DN50 / 2”
L8	Inconel 600	PN 400 / 2500 lbs	DN50 / 2”
M8	Monel 400	PN 400 / 2500 lbs	DN50 / 2”
T8	Titanium Grade 2	PN 400 / 2500 lbs	DN50 / 2”

10. End Support (only IBF-36)	
0	without end support
C	CS
S	316Ti (1.4571)
X	Duplex (1.4462)
K	904L (1.4539)
M	Monel 400
H	Hastelloy C4
D	Incoloy 800
L	Inconel 600
V	PVDF **(max. PN6)**
T	Titanium Grade 2
11. Insulation	
KI	without
X..	Thickness of insulation in mm (Please advise!)
12. Pipe run at place of installation	
HL	horizontal
VL	vertical
13. Integrated PT-100 / RTD	
T0	without
TA	3-wire
TB	2-wire, with Ex-approval
14. Head transmitter for RTD	
	Please see page 45
15. Process connection	
	Please see page 101
16. Instrument valves	
	Please see page 101

Order key IBF-35/36:

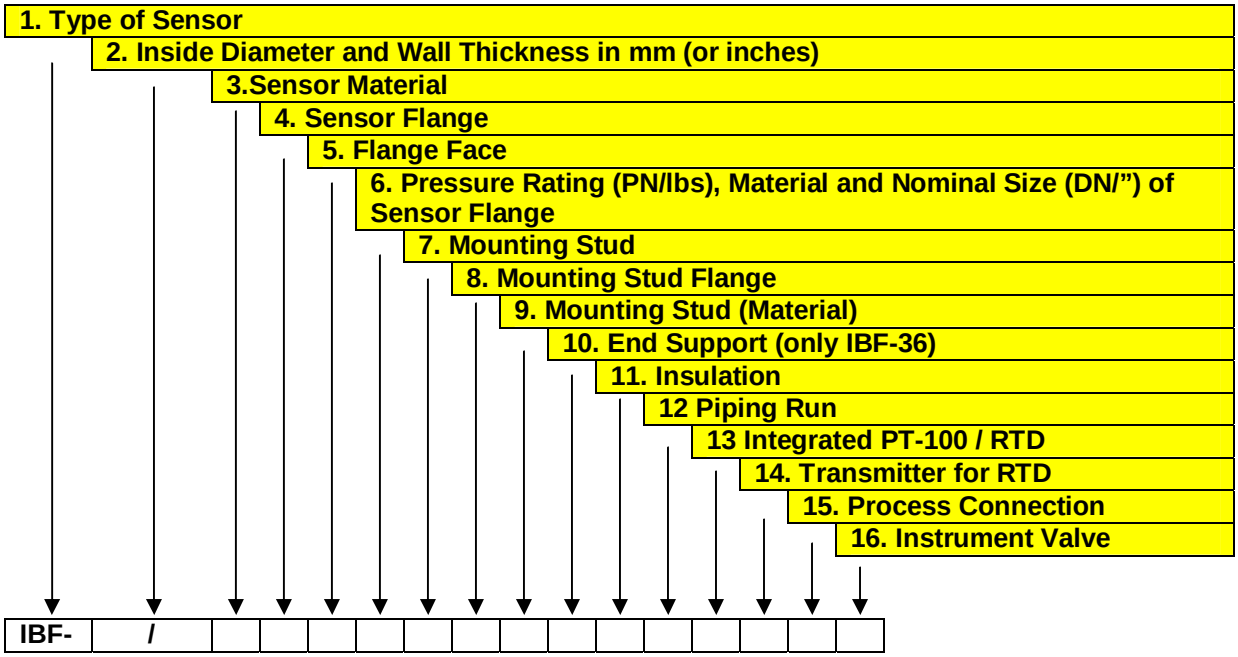

d.4) IBF-65/66

1. Type of Sensor			
IBF-65	without end support		
IBF-66	with end support		
2. Inside Diameter and Wall Thickness			
ID/WT	Inside diameter and wall thickness in mm (or inches), please specify		
3. Sensor Material			
S	316Ti (1.4571)		
X	A 182 F51 (1.4462) “Duplex”		
K	904L (1.4539)		
H	Hastelloy C4 (2.4610)		
Y	Incoloy 800 (1.4876)		
L	Inconel 600 (2.4816)		
M	Monel 400 (2.4360)		
D	PVDF **(max. pressure 6 bar, up to DN 1200)**		
T	B 348 Grade 2 (3.7035) “Titanium Grade 2”		
4. Sensor Flange (always identically to sensor material)			
SM	acc. DIN		
SA	acc. ANSI		
5. Flange Face			
1	acc. DIN		
2	ANSI RF		
3	ANSI RF SF (smooth finish)		
4	RTJ		
6. Pressure rating (PN/lbs), Material and nominal Size (DN / “) of Sensor Flange			
	Pressure rating	**Material**	**Nominal Size**
D01	PN 16 / 150 lbs	316Ti / 1.4571	DN65 / 2 ½”
D02	PN 40	316Ti / 1.4571	DN65 / 2 ½”
D03	PN63 / 300 lbs	316Ti / 1.4571	DN65 / 2 ½”
D04	PN 100 / 600 lbs	316Ti / 1.4571	DN65 / 2 ½”
D05	PN 160	316Ti / 1.4571	DN65 / 2 ½”
D06	PN 250 / 1500 lbs	316Ti / 1.4571	DN65 / 2 ½”
D07	PN 320	316Ti / 1.4571	DN65 / 2 ½”
D08	PN 400 / 2500 lbs	316Ti / 1.4571	DN65 / 2 ½”
D10	PN 16 / 150 lbs	Duplex / 1.4462	DN65 / 2 ½”
D11	PN 40	Duplex / 1.4462	DN65 / 2 ½”
D12	PN63 / 300 lbs	Duplex / 1.4462	DN65 / 2 ½”
D13	PN 100 / 600 lbs	Duplex / 1.4462	DN65 / 2 ½”
D14	PN 160	Duplex / 1.4462	DN65 / 2 ½”
D15	PN 250 / 1500 lbs	Duplex / 1.4462	DN65 / 2 ½”
D16	PN 320	Duplex / 1.4462	DN65 / 2 ½”
D17	PN 400 / 2500 lbs	Duplex / 1.4462	DN65 / 2 ½”
D20	PN 16 / 150 lbs	904L / 1.4539	DN65 / 2 ½”
D21	PN 40	904L / 1.4539	DN65 / 2 ½”
D22	PN63 / 300 lbs	904L / 1.4539	DN65 / 2 ½”
D23	PN 100 / 600 lbs	904L / 1.4539	DN65 / 2 ½”
D24	PN 160	904L / 1.4539	DN65 / 2 ½”
D25	PN 250 / 1500 lbs	904L / 1.4539	DN65 / 2 ½”
D26	PN 320	904L / 1.4539	DN65 / 2 ½”
D27	PN 400 / 2500 lbs	904L / 1.4539	DN65 / 2 ½”

Continued next page

6. Pressure rating (PN/lbs), Material and nominal Size (DN / “) of Sensor Flange (Continuation)			
	Pressure rating	**Material**	**Nominal Size**
D30	PN 16 / 150 lbs	Hastelloy C4	DN65 / 2 ½”
D31	PN 40	Hastelloy C4	DN65 / 2 ½”
D32	PN63 / 300 lbs	Hastelloy C4	DN65 / 2 ½”
D33	PN 100 / 600 lbs	Hastelloy C4	DN65 / 2 ½”
D34	PN 160	Hastelloy C4	DN65 / 2 ½”
D35	PN 250 / 1500 lbs	Hastelloy C4	DN65 / 2 ½”
D36	PN 320	Hastelloy C4	DN65 / 2 ½”
D37	PN 400 / 2500 lbs	Hastelloy C4	DN65 / 2 ½”
D40	PN 16 / 150 lbs	Incoloy 800	DN65 / 2 ½”
D41	PN 40	Incoloy 800	DN65 / 2 ½”
D42	PN63 / 300 lbs	Incoloy 800	DN65 / 2 ½”
D43	PN 100 / 600 lbs	Incoloy 800	DN65 / 2 ½”
D44	PN 160	Incoloy 800	DN65 / 2 ½”
D45	PN 250 / 1500 lbs	Incoloy 800	DN65 / 2 ½”
D46	PN 320	Incoloy 800	DN65 / 2 ½”
D47	PN 400 / 2500 lbs	Incoloy 800	DN65 / 2 ½”
D50	PN 16 / 150 lbs	Inconel 600	DN65 / 2 ½”
D51	PN 40	Inconel 600	DN65 / 2 ½”
D52	PN63 / 300 lbs	Inconel 600	DN65 / 2 ½”
D53	PN 100 / 600 lbs	Inconel 600	DN65 / 2 ½”
D54	PN 160	Inconel 600	DN65 / 2 ½”
D55	PN 250 / 1500 lbs	Inconel 600	DN65 / 2 ½”
D56	PN 320	Inconel 600	DN65 / 2 ½”
D57	PN 400 / 2500 lbs	Inconel 600	DN65 / 2 ½”
D60	PN 16 / 150 lbs	Monel 400	DN65 / 2 ½”
D61	PN 40	Monel 400	DN65 / 2 ½”
D62	PN63 / 300 lbs	Monel 400	DN65 / 2 ½”
D63	PN 100 / 600 lbs	Monel 400	DN65 / 2 ½”
D64	PN 160	Monel 400	DN65 / 2 ½”
D65	PN 250 / 1500 lbs	Monel 400	DN65 / 2 ½”
D66	PN 320	Monel 400	DN65 / 2 ½”
D67	PN 400 / 2500 lbs	Monel 400	DN65 / 2 ½”
D70	PN16 / 150 lbs	PVDF, **max. pressure 6 bar**	DN65 / 2 ½”
D80	PN 16 / 150 lbs	Titanium Grade 2	DN65 / 2 ½”
D81	PN 40	Titanium Grade 2	DN65 / 2 ½”
D82	PN63 / 300 lbs	Titanium Grade 2	DN65 / 2 ½”
D83	PN 100 / 600 lbs	Titanium Grade 2	DN65 / 2 ½”
D84	PN 160	Titanium Grade 2	DN65 / 2 ½”
D85	PN 250 / 1500 lbs	Titanium Grade 2	DN65 / 2 ½”
D86	PN 320	Titanium Grade 2	DN65 / 2 ½”
D87	PN 400 / 2500 lbs	Titanium Grade 2	DN65 / 2 ½”

7. Mounting Stud (material of stud has to be identical / resp. weldable to the pipe material)	
0	without
R	mounting stud with flange (standard)
W	weldolet-stud with flange
8. Mounting Stud Flange (size and pressure rating has to be identical to sensor flange)	
0	without
M	acc. DIN, form C
A	acc. ANSI, RF
F	acc. ANSI, SF (smooth finish)
T	acc. ANSI, RTJ
S	Saddle flange, size of flange: DN40, material GGG-40 EWS-coated, without retainer

Continued next page

8. Mounting Stud) (Continuation)	
V	Saddle flange with retainer, material: rustproof steel, outside diameter pipe: 87…470 mm: gasket: NBR
3	Saddle flange with retainer, material 1.4301, outside diameter pipe: 75…582 mm, gasket: NBR
Z	Saddle flange with retainer, material 1.4301, for asbestos-cement pipe, outside diameter pipe: 97…494 mm, gasket: NBR
9. Mounting Stud material, with flange, (max pressure rating)	
0	without

	Material	Pressure rating	Size
C1	C.S.	PN 16 / 150 lbs	DN65 / 2 ½”
S1	316Ti	PN 16 / 150 lbs	DN65 / 2 ½”
X1	Duplex	PN 16 / 150 lbs	DN65 / 2 ½”
K1	904L (1.4539)	PN 16 / 150 lbs	DN65 / 2 ½”
H1	Hastelloy C4	PN 16 / 150 lbs	DN65 / 2 ½”
D1	Incoloy 800	PN 16 / 150 lbs	DN65 / 2 ½”
L1	Inconel 600	PN 16 / 150 lbs	DN65 / 2 ½”
M1	Monel 400	PN 16 / 150 lbs	DN65 / 2 ½”
T1	Titanium Grade 2	PN 16 / 150 lbs	DN65 / 2 ½”
C2	C.S.	PN 40	DN65 / 2 ½”
S2	316Ti	PN 40	DN65 / 2 ½”
X2	Duplex	PN 40	DN65 / 2 ½”
K2	904L (1.4539)	PN 40	DN65 / 2 ½”
H2	Hastelloy C4	PN 40	DN65 / 2 ½”
D2	Incoloy 800	PN 40	DN65 / 2 ½”
L2	Inconel 600	PN 40	DN65 / 2 ½”
M2	Monel 400	PN 40	DN65 / 2 ½”
T2	Titanium Grade 2	PN 40	DN65 / 2 ½”
C3	C.S.	PN 63 / 300 lbs	DN65 / 2 ½”
S3	316Ti	PN 63 / 300 lbs	DN65 / 2 ½”
X3	Duplex	PN 63 / 300 lbs	DN65 / 2 ½”
K3	904L (1.4539)	PN 63 / 300 lbs	DN65 / 2 ½”
H3	Hastelloy C4	PN 63 / 300 lbs	DN65 / 2 ½”
D3	Incoloy 800	PN 63 / 300 lbs	DN65 / 2 ½”
L3	Inconel 600	PN 63 / 300 lbs	DN65 / 2 ½”
M3	Monel 400	PN 63 / 300 lbs	DN65 / 2 ½”
T3	Titanium Grade 2	PN 63 / 300 lbs	DN65 / 2 ½”
C4	C.S.	PN 100 / 600 lbs	DN65 / 2 ½”
S4	316Ti	PN 100 / 600 lbs	DN65 / 2 ½”
X4	Duplex	PN 100 / 600 lbs	DN65 / 2 ½”
K4	904L (1.4539)	PN 100 / 600 lbs	DN65 / 2 ½”
H4	Hastelloy C4	PN 100 / 600 lbs	DN65 / 2 ½”
D4	Incoloy 800	PN 100 / 600 lbs	DN65 / 2 ½”
L4	Inconel 600	PN 100 / 600 lbs	DN65 / 2 ½”
M4	Monel 400	PN 100 / 600 lbs	DN65 / 2 ½”
T4	Titanium Grade 2	PN 100 / 600 lbs	DN65 / 2 ½”
C5	C.S.	PN 160	DN65 / 2 ½”
S5	316Ti	PN 160	DN65 / 2 ½”
X5	Duplex	PN 160	DN65 / 2 ½”
K5	904L (1.4539)	PN 160	DN65 / 2 ½”
H5	Hastelloy C4	PN 160	DN65 / 2 ½”
D5	Incoloy 800	PN 160	DN65 / 2 ½”
L5	Inconel 600	PN 160	DN65 / 2 ½”
M5	Monel 400	PN 160	DN65 / 2 ½”
T5	Titanium Grade 2	PN 160	DN65 / 2 ½”

Continued next page

9. Mounting Stud material, with flange, (max pressure rating) (Continuation)			
	Material	**Pressure rating**	**Size**
C6	C.S.	PN 250 / 1500 lbs	DN65 / 2 ½”
S6	316Ti	PN 250 / 1500 lbs	DN65 / 2 ½”
X6	Duplex	PN 250 / 1500 lbs	DN65 / 2 ½”
K6	904L (1.4539)	PN 250 / 1500 lbs	DN65 / 2 ½”
H6	Hastelloy C4	PN 250 / 1500 lbs	DN65 / 2 ½”
D6	Incoloy 800	PN 250 / 1500 lbs	DN65 / 2 ½”
L6	Inconel 600	PN 250 / 1500 lbs	DN65 / 2 ½”
M6	Monel 400	PN 250 / 1500 lbs	DN65 / 2 ½”
T6	Titanium Grade 2	PN 250 / 1500 lbs	DN65 / 2 ½”
C7	C.S.	PN 320	DN65 / 2 ½”
S7	316Ti	PN 320	DN65 / 2 ½”
X7	Duplex	PN 320	DN65 / 2 ½”
K7	904L (1.4539)	PN 320	DN65 / 2 ½”
H7	Hastelloy C4	PN 320	DN65 / 2 ½”
D7	Incoloy 800	PN 320	DN65 / 2 ½”
L7	Inconel 600	PN 320	DN65 / 2 ½”
M7	Monel 400	PN 320	DN65 / 2 ½”
T7	Titanium Grade 2	PN 320	DN65 / 2 ½”
C8	C.S.	PN 400 / 2500 lbs	DN65 / 2 ½”
S8	316Ti	PN 400 / 2500 lbs	DN65 / 2 ½”
X8	Duplex	PN 400 / 2500 lbs	DN65 / 2 ½”
K8	904L (1.4539)	PN 400 / 2500 lbs	DN65 / 2 ½”
H8	Hastelloy C4	PN 400 / 2500 lbs	DN65 / 2 ½”
D8	Incoloy 800	PN 400 / 2500 lbs	DN65 / 2 ½”
L8	Inconel 600	PN 400 / 2500 lbs	DN65 / 2 ½”
M8	Monel 400	PN 400 / 2500 lbs	DN65 / 2 ½”
T8	Titanium Grade 2	PN 400 / 2500 lbs	DN65 / 2 ½”

10. End Support (only IBF-66)	
0	without end support
C	CS
S	316Ti (1.4571)
X	Duplex (1.4462)
K	904L (1.4539)
M	Monel 400
H	Hastelloy C4
D	Incoloy 800
L	Inconel 600
V	PVDF **(max. PN6)**
T	Titanium Grade 2
11. Insulation	
KI	without
X..	Thickness of insulation in mm (Please advise!)
12. Pipe run at place of installation	
HL	horizontal
VL	vertical
13. Integrated PT-100 / RTD	
T0	without
TA	3-wire
TB	2-wire, with Ex-approval
14. Head transmitter for RTD	
	Please see page 45
15. Process connection	
	Please see page 101
16. Instrument valves	
	Please see page 101

Order key IBF-65/66:

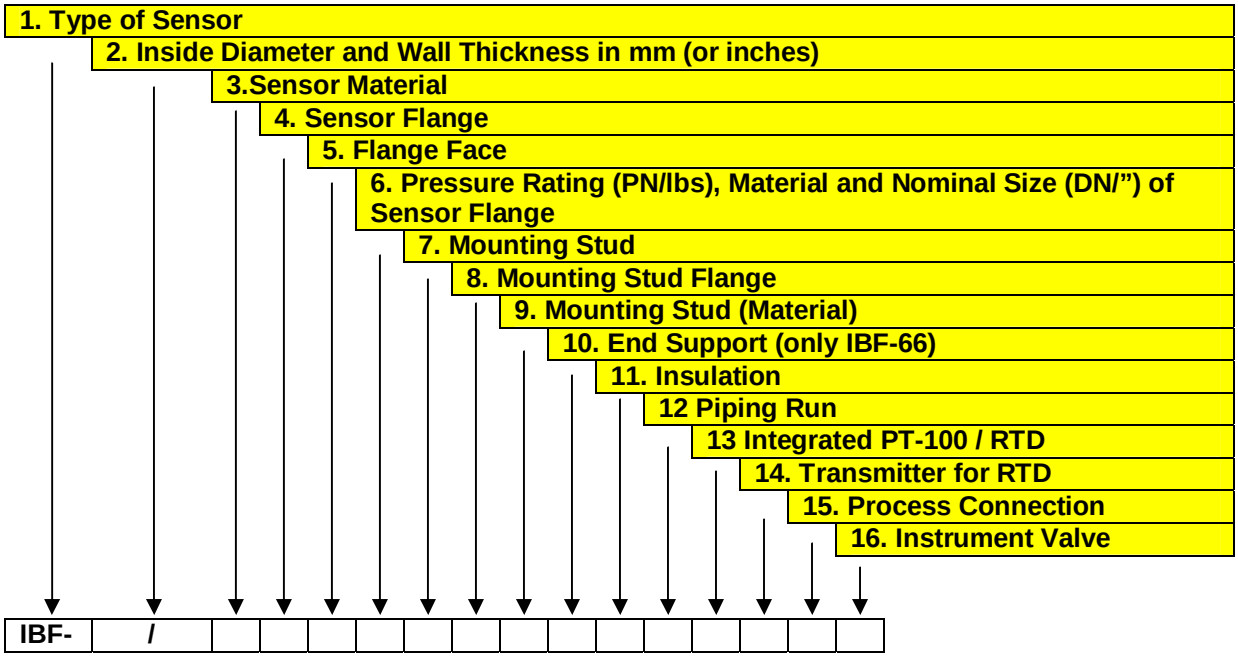

B.2.3 Itabar®-Flow-Sensors for Flue Gas Applications Types: IBF-100 (up to 232 psi [16 bar])

a.) Description:

The ITABAR-sensor IBF-100 is specially designed to measure volumetric flow of flue gas.
In this model the two pressure chambers within the sensor are enlarged. The reasons are as follows:
1) The frequency of cleaning requirements is reduced.
2) Cleaning by mechanical means or with air pressure is made easy.
The design allows cleaning of the pressure chambers via the sensor's pipe mounting assembly as well as from its flanged end support. For cleaning purposes the two parallel pressure chambers have a round shape which runs over the entire length of the sensor.
The standard sensor material is 316 SS; the following materials are options: 1.4539, Hastelloy C4, Incoloy und PVDF.
For automatic cleaning the LSP air-purge unit is available.

The flue gas sensor IBF-100 is approved for (German) governmentally ordered volumetric flow measurements of water saturated emissions (TA Luft 1986, 13. BimSchV and 17. BimSchV).

Fig. 48: Itabar IBF-100

b) Drawing for IBF-100

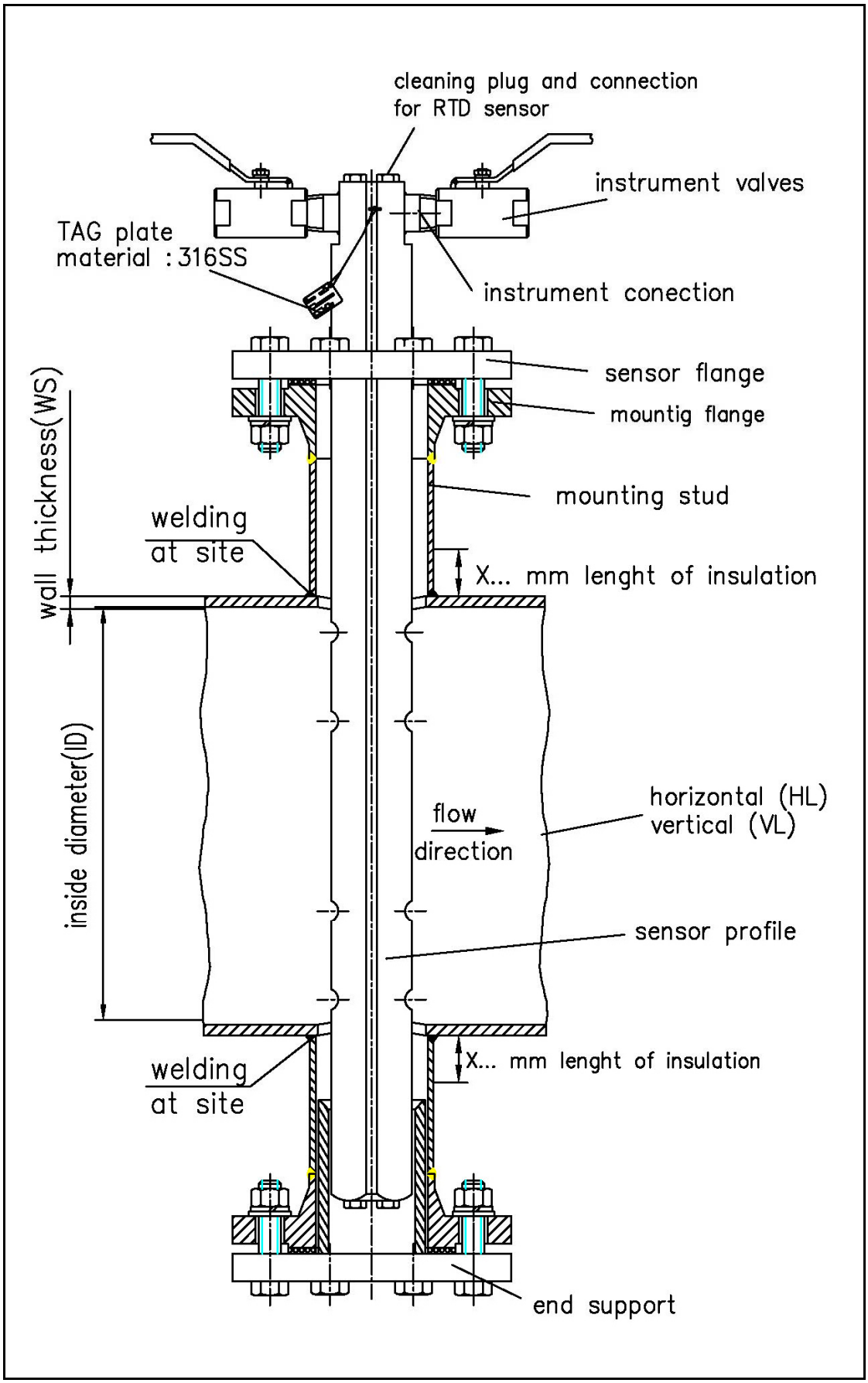

c) Order Specification Itabar-Flow-Sensors, Series IBF-100

Code	Description		
1. Type of Sensor			
IBF-100	with end support		
2. Inside Diameter and Wall Thickness			
ID/WT	Inside diameter and wall thickness in mm (or inches), please specify		
3. Sensor Material			
S	316Ti (1.4571) **– standard –**		
K	904L (1.4539)		
H	Hastelloy C4 (2.4610)		
Y	Incoloy 800 (1.4876)		
D	PVDF **(max. pressure PN 6, up to DN 1000)**		
L	Inconel 600 (2.4816)		
4. Sensor Flange, (identical to sensor material)			
SM	Flange acc. to DIN		
SA	Flange acc. to ANSI		
5. Flange finish			
1	acc. DIN		
2	ANSI RF		
3	ANSI RFSF (smooth finish)		
6. Sensor Flange pressure rating (PN / lbs), material and size (DN / inch)			
	Pressure rating	**Material**	**Size**
E1	PN 16 / 150 lbs	316Ti	DN 80 / 3”
E2	PN 16 / 150 lbs	904L	DN 80 / 3”
E3	PN 16 / 150 lbs	Hastelloy C4	DN 80 / 3”
E4	PN 16 / 150 lbs	Incoloy 800	DN 80 / 3”
E5	PN 16 / 150 lbs	PVDF	DN 80 / 3”
E6	PN 16 / 150 lbs	Inconel 600	DN 80 / 3”
7. Mounting Stud (material of stud has to be identical / resp. weldable to the pipe material)			
0	without		
R	mounting stud with flange (standard)		
W	weldolet-stud with flange		
8. Mounting Stud Flange (size and pressure rating has to be identical to sensor flange)			
0	without		
M	flange acc. DIN, flange face form C		
A	flange acc. ANSI, flange face RF		
F	flange acc. ANSI, flange face SF (smooth finish)		
9. Mounting Stud Flange pressure rating (PN / lbs), material and size (DN / inch) (pressure rating and size always identical to sensor flange)			
	Pressure rating	**Material**	**Size**
0	without		
C1	PN 16 / 150 lbs	C.S.	DN 80 / 3”
S1	PN 16 / 150 lbs	316Ti	DN 80 / 3”
K1	PN 16 / 150 lbs	904L	DN 80 / 3”
H1	PN 16 / 150 lbs	Hastelloy C4	DN 80 / 3”
Y1	PN 16 / 150 lbs	Incoloy 800	DN 80 / 3”
D1	PN 16 / 150 lbs	PVDF	DN 80 / 3”
L1	PN 16 / 150 lbs	Inconel 600	DN 80 / 3”
10. End Support			
0	without (if already existing)		
C	C.S.		
S	316Tio		
K	904L		
H	Hastelloy C4		
Y	Incoloy 800		
D	PVDF		
L	Inconel 600		

Continued next page

Code	Description
11. Insulation	
KI	without insulation
X..	thermal insulation, please advise thickness in mm (or inches)
12. Piping Run at place of installation	
HL	horizontal
VL	vertical
13. Integrated PT-100 RTD (not for sensor made of PVDF)	
T0	without
TA	3-wire
TB	2-wire, with Ex-approval
14. Head Transmitter for RTD	
	Please see page 45
15. Process Connection	
	Please see page 101
16 Instrument Valves	
	Please see page 101

Order key IBF-100:

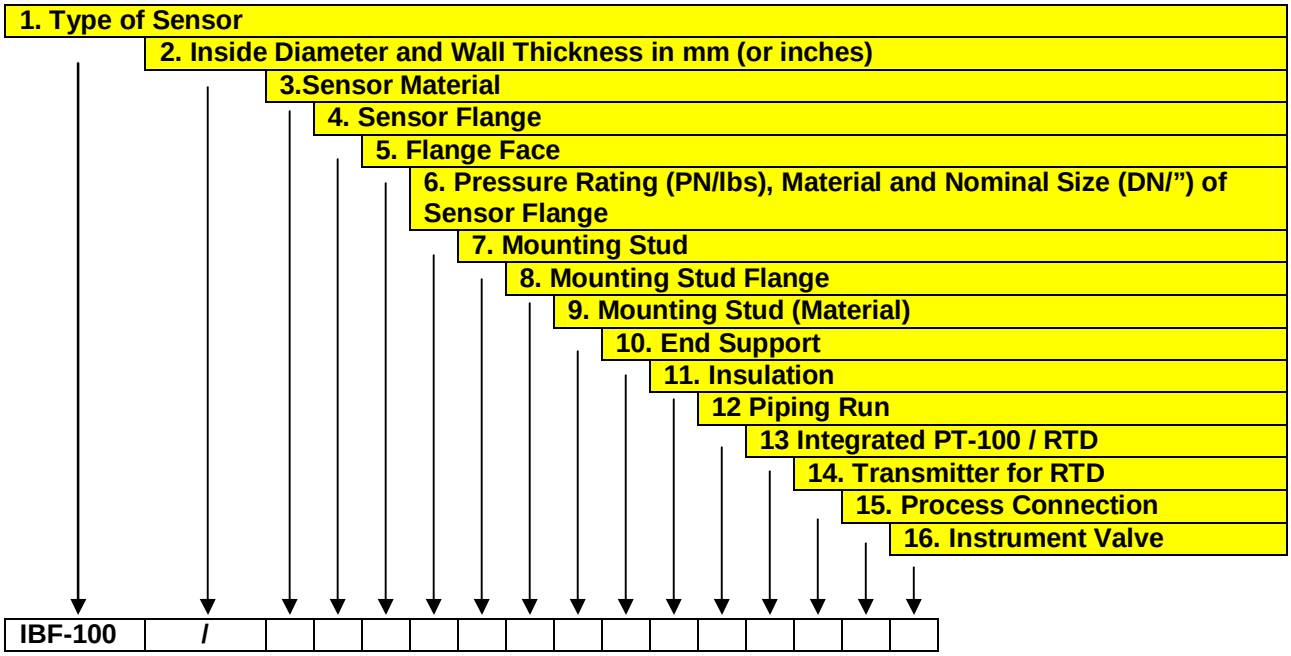

d) Ordering Codes for Instrument Connection and Shut-off Device for Itabar-Flow-Sensors type IBF

Code	Description
Instrument Connection	
A04	Sensor head with ¼” NPT-M
A03	Sensor head with ½” NPT-M

A06	Flange plate for direct mounting of a 3-way-manifold, material 316Ti
A07	Flange plate for direct mounting of a 3-way-manifold, material Duplex (1.4462)
A08	Flange plate for direct mounting of a 3-way-manifold, material 904L (1.4539)
A09	Flange plate for direct mounting of a 3-way-manifold, material Hastelloy C4
A10	Flange plate for direct mounting of a 3-way-manifold, material Inconel 600
A11	Flange plate for direct mounting of a 3-way-manifold, material Monel 400
A12	Flange plate for direct mounting of a 3-way-manifold, material Titanium Grade 2
A13	Flange plate for direct mounting of a 3-way-manifold, material PVDF
A14	Flange plate for direct mounting of a 3-way-manifold, material Incoloy 800

A15	Flange plate for direct mounting of a 5-way-manifold, material 316Ti
A16	Flange plate for direct mounting of a 5-way-manifold, material Duplex (1.4462)
A17	Flange plate for direct mounting of a 5-way-manifold, material 904L (1.4539)
A18	Flange plate for direct mounting of a 5-way-manifold, material Hastelloy C4
A19	Flange plate for direct mounting of a 5-way-manifold, material Inconel 600
A20	Flange plate for direct mounting of a 5-way-manifold, material Monel 400
A21	Flange plate for direct mounting of a 5-way-manifold, material Titanium Grade 2
A22	Flange plate for direct mounting of a 5-way-manifold, material PVDF
A23	Flange plate for direct mounting of a 5-way-manifold, material Incoloy 800

Shut-off Devices for Impulse Lines	
A00	without
A55	ball valve PN 40; case C.S. / ½” NPT-F, packing: PTFE
A56	ball valve PN 40; case A182-F316H (1.4401) / ½” NPT-F, packing: PTFE
A57	ball valve PN 40; case C.S. / ¼” NPT-F, packing: PTFE
A58	ball valve PN 40; case A182-F316H (1.4401) / ¼” NPT-F, packing: PTFE
A59	shut-off valve PN 400, case C.S., ¼” NPT-F, packing: graphite
A60	shut-off valve PN 400, case A182-F316H (1.4401), ¼” NPT-F, packing: graphite
A61	shut-off valve PN 400, case C.S., ½” NPT-F, packing: graphite
A62	shut-off valve PN 400, case A182-F316H (1.4401), ½” NPT-F, packing: graphite
A63	shut-off valve ½” NPT, PN10, PTFE
A64	shut-off valve G ½”, PN10, PVDF
A66	direct mounted, with 3-way-manifold, PN400, case A182-F316L/316L (1.4404) packing: PTFE (only with A06…A14)
A67	direct mounted, with 3-way-manifold, PN10, case PTFE, packing: PTFE (only with A06…A14)
A71	direct mounted, with 5-way-manifold, PN400, case A182-F316L/316L (1.4404) packing: PTFE (only with A15…A23)

Accessories	
E12	1 pair of screw joints ½” NPT-M / ∅ **12 mm**, 316SS (1.4571)
E14	1 pair of screw joints ½” NPT-M / ∅ **14 mm**, 316SS (1.4571)

B.3	**Itabar®-Flow-Sensors for Liquids and Gases (FloTap-Version) (Installation under Pressure)**
B.3.1	**Itabar®-Flow-Sensors (FloTap-Version with Threaded Process Connection) Types: FTN-20/21/25/26/35/36 (up to 87 psi [PN 6])**

a) Description

The FTN ITABAR-sensor series is designed to measure the volumetric flow of liquids, gases and steam.

The construction features a welding boss between the pipe and the sensor-related parts and a compression fitting to seal the sensor profile. A safety chain between the installed sensor and the pipe serves as a protective device during the removal process.

A FTN sensor is usable up to an operating pressure of 88 psi and an operating temperature of up to 200°C.

In cases where the WINFLOW sizing program recommends a counter end support because of the high flow velocity it is better to select the next size sensor model. During the initial installation it is not possible to install a sensor counter support. During subsequent installations under pressure it can also be difficult to meet the counter support at the opposite end of the pipe. Furthermore the maximum installation values listed in the WINFLOW-program must be observed.

Fig 49: Itabar type FTN-25

b) Drawing for FTN

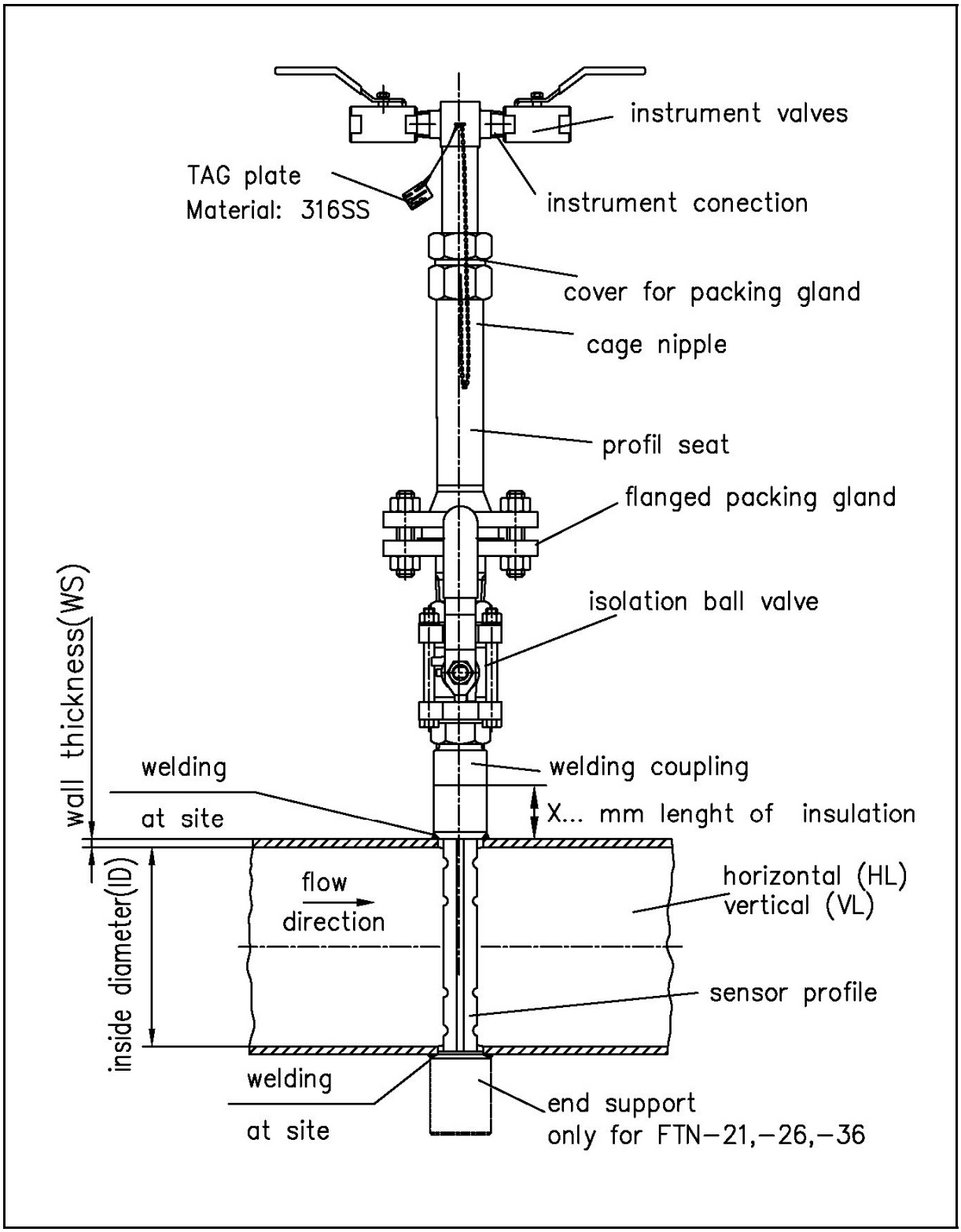

c.) Order Data for Itabar® Series FTN-20/21/25/26/35/36

c.1) Sensor type:

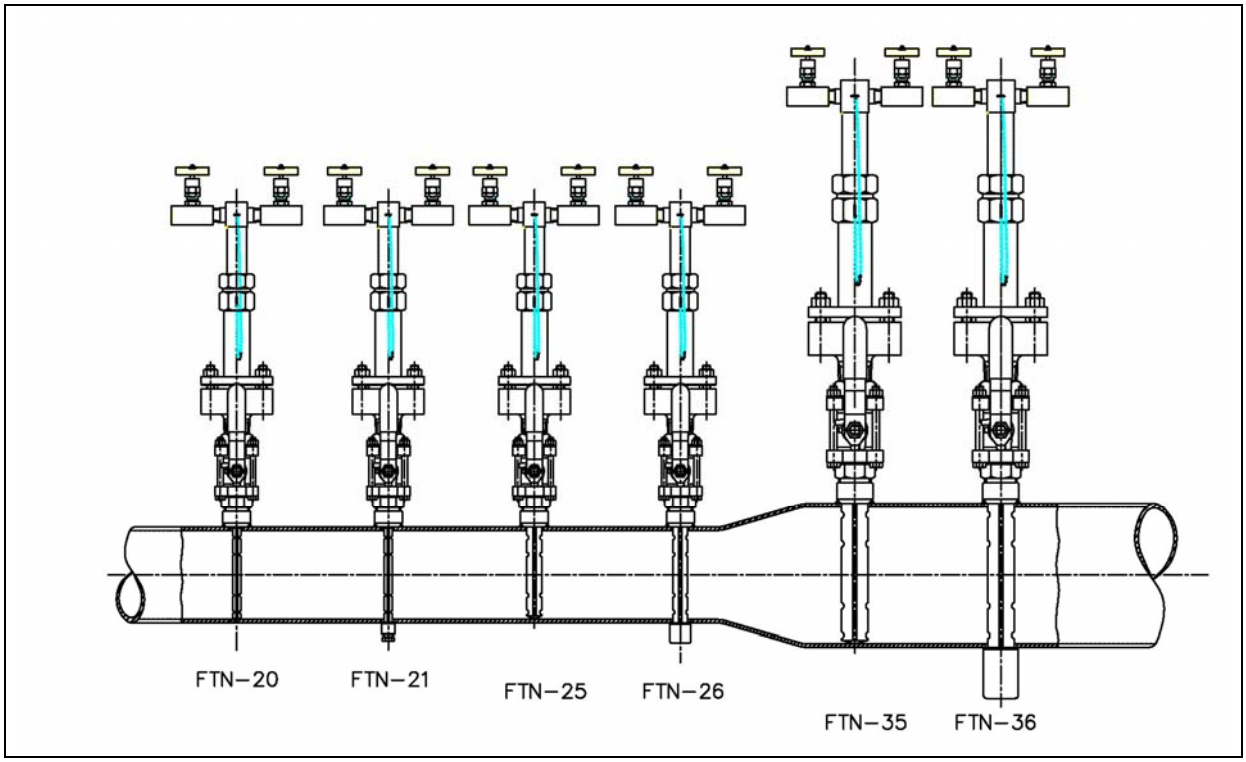

Pipe diameter Inches…….	mm	Maximum allowable volumetric flow in m³/h Sensor type FTN -20	FTN -21	FTN -25	FTN -26	FTN -35	FTN -36
1 1/2	DN 40	40	114	---	---	---	---
2	DN 50	59	161	---	---	---	---
2 1/4	DN 65	93	243	---	---	---	---
3	DN 80	130	328	---	---	---	---
4	DN 100	179	439	205	544	---	---
5	DN 125	---	---	281	719	---	---
6	DN 150	---	---	358	894	---	---
8	DN 200	---	---	515	1242	---	---
10	DN 250	---	---	687	1623	---	---
12	DN 300	---	---	872	2034	1757	4204
14	DN 350	---	---	1053	2433	2142	5067
16	DN 400	---	---	1226	2828	2532	5938
20	DN 500	---	---	1592	3627	3283	7611
24	DN 600	---	---	1949	4423	4052	9327
28	DN 700	---	---	2318	5237	4851	11106
32	DN 800	---	---	2704	6099	5667	12930
36	DN 900	---	---	---	7000	---	14790
40	DN 1000	---	---	---	7921	---	16614
48	DN 1200	---	---	---	9763	---	20450
56	DN 1400	---	---	---	---	---	24220
64	DN 1600	---	---	---	---	---	27987
72	DN 1800	---	---	---	---	---	31613
80	DN 2000	---	---	---	---	---	---

These values are for water of ρ = 0,9982 kg/l SGU and at a temperature T = 20 °C. To calculate volumetric or mass flow of fluids with other densities see chapter 6 „Specifications of DP Sensors with WINFLOW“.

d.) Order Specification Itabar-Flow-Sensors, Series FTN

d.1) FTN-20/21

1. Type of Sensor	
FTN-20	without end support
FTN-21	with end support
2. Inside Diameter and Wall Thickness	
ID/WT	Inside diameter and wall thickness in mm (or inches), please specify
3. Sensor Material	
S	316Ti (1.4571)
4. Welding Coupling	
0	without
1	C.S.
2	316Ti (1.4571)
5. End Support (only FTN-21)	
0	without
C	C.S.
S	316Ti (1.4571)
6. Isolation Valve for the Sensor Profile	
A01	ball valve 1”, mat. CS
A02	ball valve 1”, mat. A182-F316/316 (1.4401)
7. Flanged Packing Gland	
S	316Ti (1.4571)
8. Cage Nipple	
PC	C.S.
PS	316Ti (1.4571)
9. Packing Material for the Flanged and Welded Packing Gland	
1	PTFE, max. 200 °C
2	Graphite, max. 400 °C
10. Thermal Insulation	
KI	without
X..	thermal insulation thickness in mm (or inches), please specify
11. Piping Run at Place of Installation	
HL	horizontal pipe run
VL	vertical pipe run
12. Process Connection	
	See page no. 119
13. Instrument Valves	
	See page no. 119

Order key FTN-20/21:

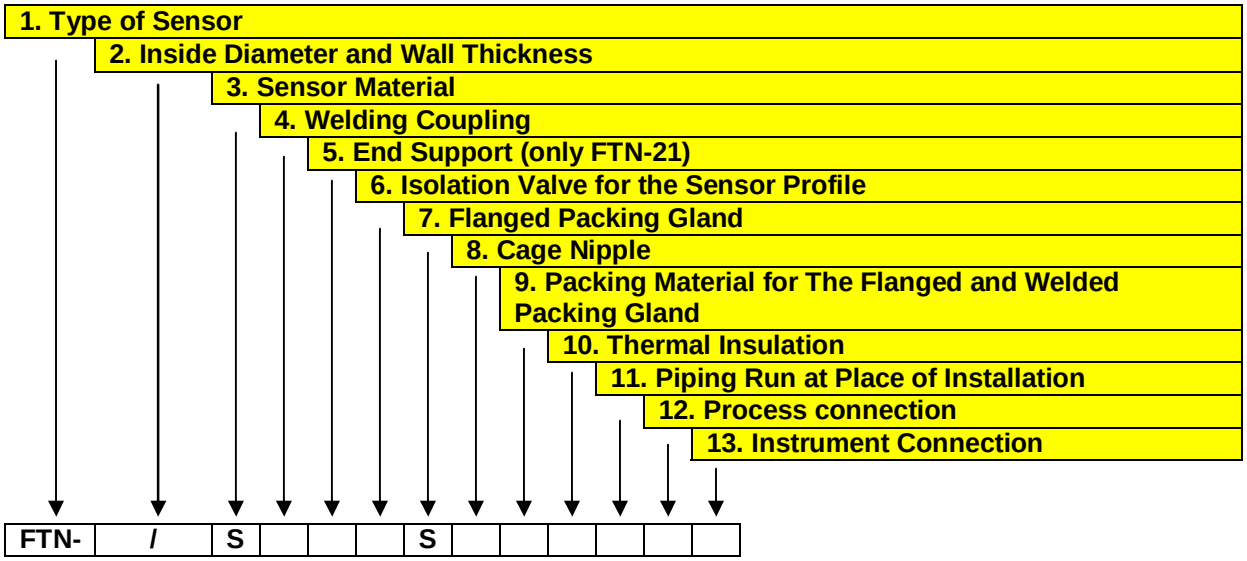

d.2) FTN-25/26

1. Type of Sensor	
FTN-25	without end support
FTN-26	with end support
2. Inside Diameter and Wall Thickness	
ID/WT	Inside diameter and wall thickness in mm (or inches), please specify
3. Sensor Material	
S	316Ti (1.4571)
4. Welding Coupling	
0	without
1	C.S.
2	316Ti (1.4571)
5. End Support (only FTN-26)	
0	without
C	C.S.
S	316Ti (1.4571)
6. Isolation Valve for the Sensor Profile	
A01	Ball valve 1”, mat. CS
A02	Ball valve 1”, mat. A182-F316/316 (1.4401)
7. Flanged Packing Gland	
S	316Ti (1.4571)
8. Cage Nipple	
PC	C.S.
PS	316Ti (1.4571)
9. Packing Material for the Flanged and Welded Packing Gland	
1	PTFE, max. 200 °C
2	Graphite, max. 400 °C
10. Thermal Insulation	
KI	without
X..	thermal insulation thickness in mm (or inches), please specify
11. Piping Run at Place of Installation	
HL	horizontal pipe run
VL	vertical pipe run
12. Integrated PT-100 RTD	
T0	without
TA	3-wire
TB	2-wire, with Ex-approval
13 Head transmitter to RTD	
	See page no. 45
14. Process Connection	
	See page no. 119
15. Instrument Valves	
	See page no. 119

Order key FTN-25/26:

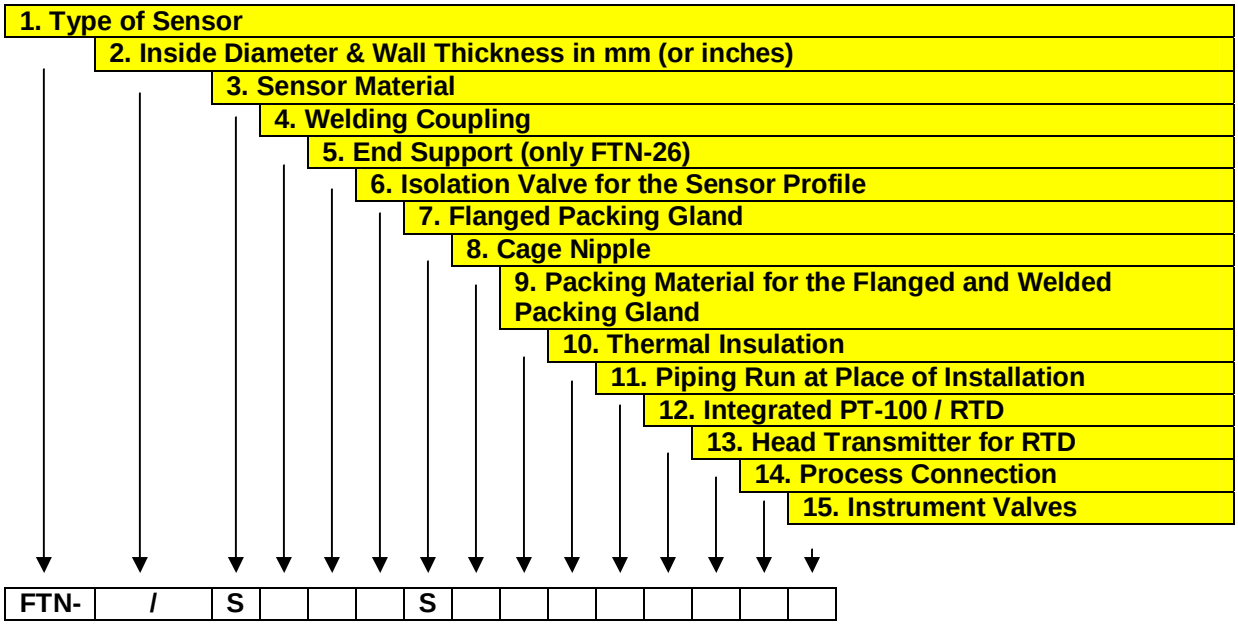

d.3) FTN-35/36

1. Type of Sensor	
FTN-35	without end support
FTN-36	with end support
2. Inside Diameter and Wall Thickness	
ID/WT	Inside diameter and wall thickness in mm (or inches), please specify
3. Sensor Material	
S	316Ti (1.4571)
4. Welding Coupling	
0	without
1	C.S.
2	316Ti (1.4571)
5. End Support (only FTN-36)	
0	without
C	C.S.
S	316Ti (1.4571)
6. Isolation Valve for the Sensor Profile	
A01	Ball valve 1”, mat. CS
A02	Ball valve 1”, mat. A182-F316/316 (1.4401)
7. Flanged Packing Gland	
S	316Ti (1.4571)
8. Cage Nipple	
PC	C.S.
PS	316Ti (1.4571)
9. Packing Material for the Flanged and Welded Packing Gland	
1	PTFE, max. 200 °C
2	Graphite, max. 400 °C
10. Thermal Insulation	
KI	without
X..	thermal insulation thickness in mm (or inches), please specify
11. Piping Run at Place of Installation	
HL	horizontal pipe run
VL	vertical pipe run
12. Integrated PT-100 RTD	
T0	without
TA	3-wire
TB	2-wire, with Ex-approval
13 Head transmitter to RTD	
	See page no. 45
14. Process Connection	
	See page no. 119
15. Instrument Valves	
	See page no. 119

Order key FTN-35/36:

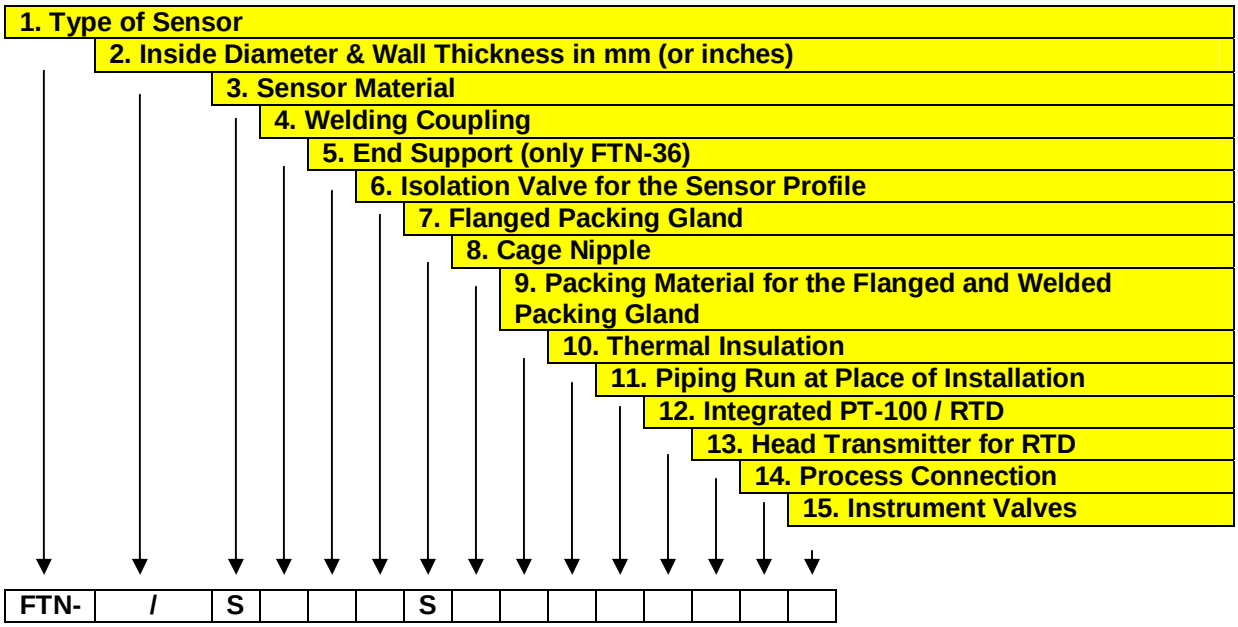

B.3.2 Itabar®-Flow-Sensors (FloTap-Version with Threaded Process Connection and Guide-Rod-Spindles) Types: FTM-20/21/25/26/35/36 (up to 580 psi [PN 40])

a) Description

The FTM ITABAR-Sensor series is designed to measure volumetric flow of liquids and gases. The insertion or removal of the sensor is made easy by two guide-rod spindles or (as an option) via a hand wheel driven gearbox. The FTM sensor is applicable to an operating pressure of up to 580 psi (PN40) and an operating temperature of up to 572 °F (300°C).

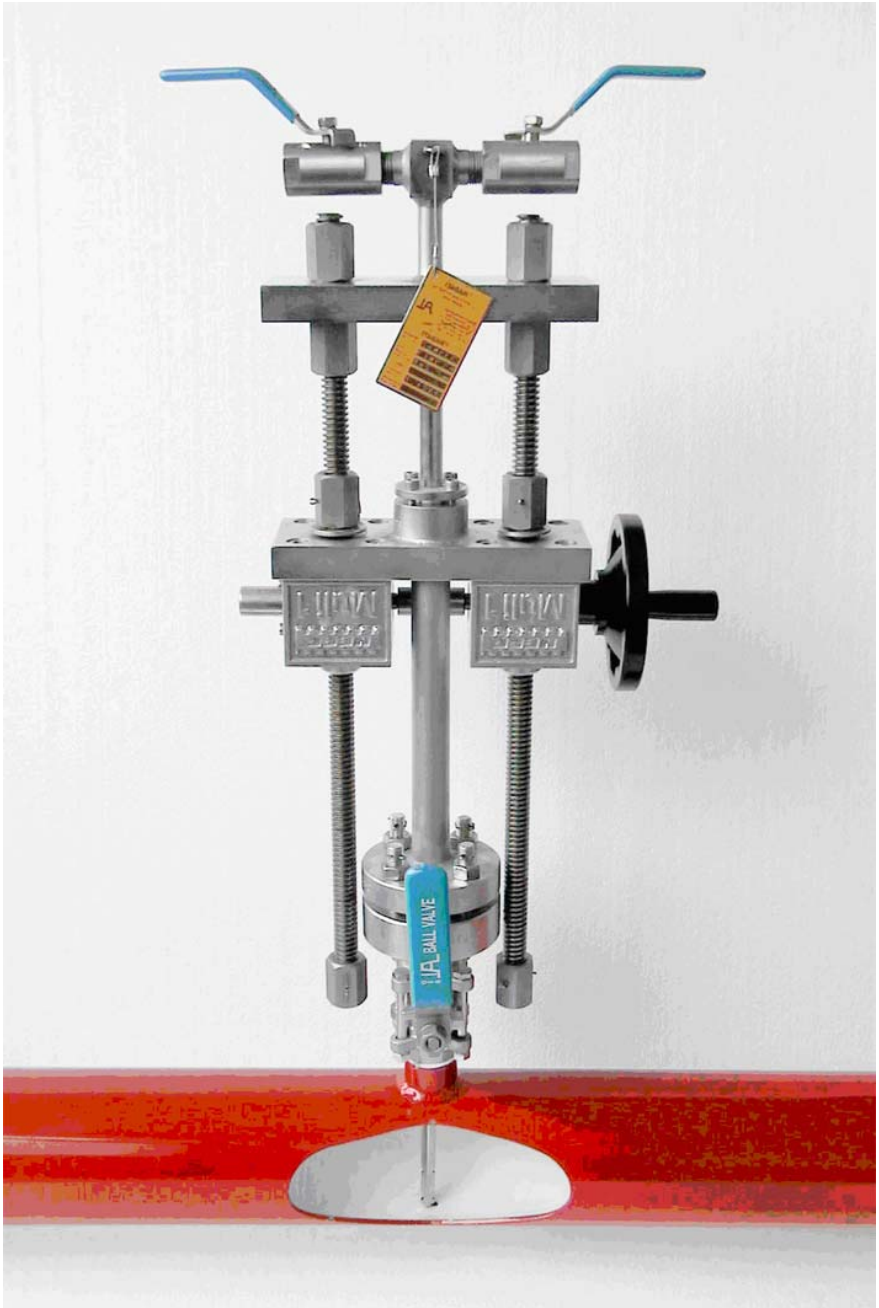

Fig 50: FTM-20 with gear box and hand wheel (option)

b) Drawing for FTM

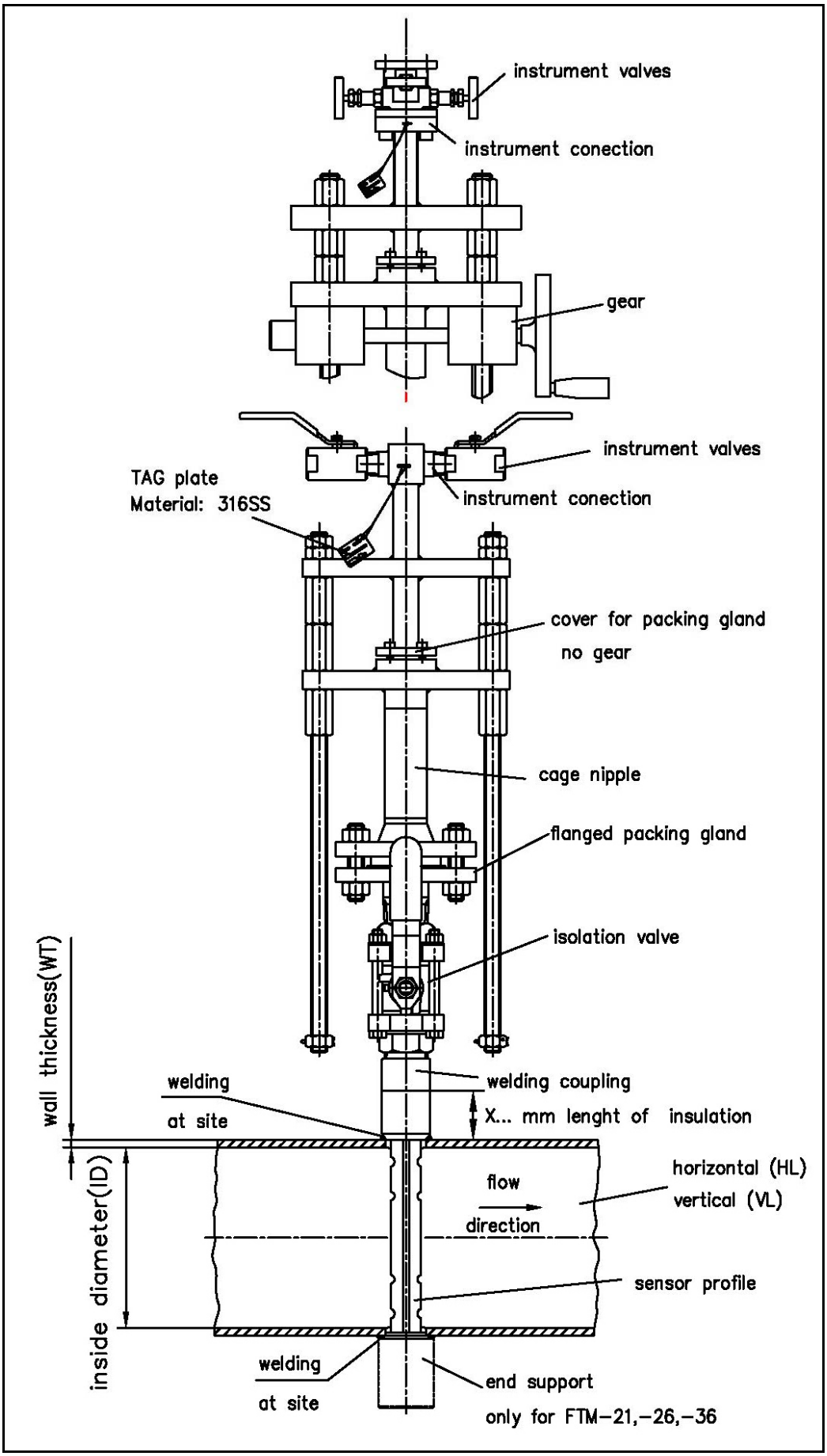

c.) Order Data for Itabar® Series FTM-20/21/25/26/35/36

c.1) Sensor type:

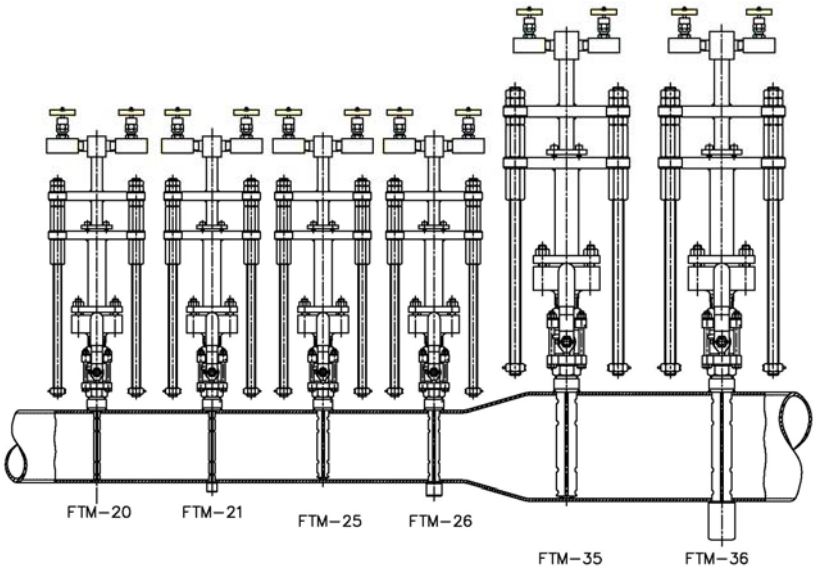

Pipe diameter		Maximum allowable volumetric flow in m³/h					
		Sensor type					
inches	mm	FTM -20	FTM -21	FTM -25	FTM -26	FTM -35	FTM -36
1 1/2	DN 40	40	114	---	---	---	---
2	DN 50	59	161	---	---	---	---
2 1/4	DN 65	93	243	---	---	---	---
3	DN 80	130	328	---	---	---	---
4	DN 100	179	439	205	544	---	---
5	DN 125	238	570	281	719	---	---
6	DN 150	---	---	358	894	---	---
8	DN 200	---	---	515	1242	---	---
10	DN 250	---	---	687	1623	---	---
12	DN 300	---	---	872	2034	1757	4204
14	DN 350	---	---	1053	2433	2142	5067
16	DN 400	---	---	1226	2828	2532	5938
20	DN 500	---	---	1592	3627	3283	7611
24	DN 600	---	---	1949	4423	4052	9327
28	DN 700	---	---	2318	5237	4851	11106
32	DN 800	---	---	2704	6099	5667	12930
36	DN 900	---	---	---	7000	---	14790
40	DN 1000	---	---	---	7921	---	16614
48	DN 1200	---	---	---	9763	---	20450
56	DN 1400	---	---	---	---	---	24220
64	DN 1600	---	---	---	---	---	27987
72	DN 1800	---	---	---	---	---	31613
80	DN 2000	---	---	---	---	---	---

These values are for water of ρ = 0,9982 kg/l SGU and at a temperature T = 20 °C. To calculate volumetric or mass flow of fluids with other densities see chapter 6 „Specifications of DP Sensors with WINFLOW“.

d.) Order Specification Itabar-Flow-Sensors, Series FTM

d1) FTM-20/21

1. Type of Sensor		
FTM-20	without end support	
FTM-21	with end support	
2. Inside Diameter and Wall Thickness		
ID/WT	Inside diameter and wall thickness in mm (or inches), please specify	
3. Sensor Material		
S	316Ti (1.4571)	
4. Welding Coupling		
0	without	
1	C.S.	
2	316Ti (1.4571)	
5. End Support (only FTM-21)		
0	without	
C	C.S.	
S	316Ti (1.4571)	
6. Isolation Valve for the Sensor Profile		
A01	ball valve 1”, mat. CS	PN 16 / 150 lbs
A02	ball valve 1”, mat. A182-F316/316 (1.4401)	PN 16 / 150 lbs
S01	gate valve 1”, mat. CS	PN 16 / 150 lbs
S02	gate valve 1”, mat. A182-F316/316 (1.4401)	PN 16 / 150 lbs
A03	ball valve 1”, mat. CS	PN 40 / 300 lbs
A04	ball valve 1”, mat. A182-F316/316 (1.4401)	PN 40 / 300 lbs
S03	gate valve 1”, mat. CS	PN 40 / 300 lbs
S04	gate valve 1”, mat. A182-F316/316 (1.4401)	PN 40 / 300 lbs
7. Flanged Packing Gland		
S	316Ti (1.4571)	
8. Cage Nipple		
PC	C.S.	
PS	316Ti (1.4571)	
9. Packing Material for the Flanged and Welded Packing Gland		
1	PTFE, max. 200 °C	
2	Graphite, max. 400 °C	
10. Thermal Insulation		
KI	without	
X..	thermal insulation thickness in mm (or inches), please specify	
11. Piping Run at Place of Installation		
HL	horizontal pipe run	
VL	vertical pipe run	
12. Gear Box		
0	without gearbox	
1	with gearbox, mat.: die-cast aluminium	
2	with gearbox, mat.: stainless steel	
13. Process Connection		
	See page no. 119	
14. Instrument Valves		
	See page no. 119	
15. Accessories		
	See page no. 119	

Order key for FTM-20/21:

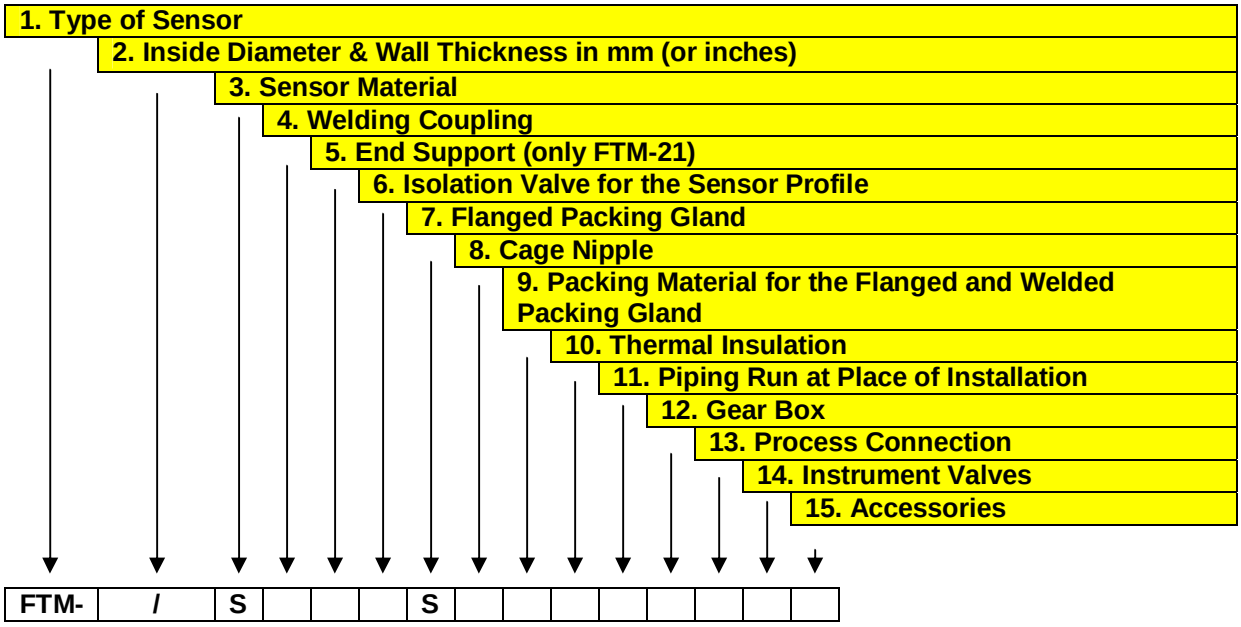

d2) FTM-25/26

1. Type of Sensor		
FTM-25	without end support	
FTM-26	with end support	
2. Inside Diameter and Wall Thickness		
ID/WT	Inside diameter and wall thickness in mm (or inches), please specify	
3. Sensor Material		
S	316Ti (1.4571)	
4. Welding Coupling		
0	without	
1	C.S.	
2	316Ti (1.4571)	
5. End Support (only FTM-26)		
0	without	
C	C.S.	
S	316Ti (1.4571)	
6. Isolation Valve for the Sensor Profile		
A05	ball valve 1 ½”, mat. CS	PN 16 / 150 lbs
A06	ball valve 1 ½”, mat. A182-F316/316 (1.4401)	PN 16 / 150 lbs
S05	gate valve 1 ½”, mat. CS	PN 16 / 150 lbs
S06	gate valve 1 ½”, mat. A182-F316/316 (1.4401)	PN 16 / 150 lbs
A07	ball valve 1 ½”, mat. CS	PN 40 / 300 lbs
A08	ball valve 1 ½”, mat. A182-F316/316 (1.4401)	PN 40 / 300 lbs
S07	gate valve 1 ½”, mat. CS	PN 40 / 300 lbs
S08	gate valve 1 ½”, mat. A182-F316/316 (1.4401)	PN 40 / 300 lbs
7. Flanged Packing Gland		
S	316Ti (1.4571)	
8. Cage Nipple		
PC	C.S.	
PS	316Ti (1.4571)	
9. Packing Material for the Flanged and Welded Packing Gland		
1	PTFE, max. 200 °C	
2	Graphite, max. 400 °C	
10. Thermal Insulation		
KI	without	
X..	thermal insulation thickness mm (or inches), please specify	
11. Piping Run at Place of Installation		
HL	horizontal pipe run	
VL	vertical pipe run	
12. Gear Box		
0	without gearbox	
1	with gearbox, mat.: die-cast aluminium	
2	with gearbox, mat.: stainless steel	
13. Integrated PT-100 RTD		
T0	without	
TA	3-wire	
TB	2-wire, with Ex-approval	
14. Head Transmitter for RTD		
	See page no. 45	
15. Process Connection		
	See page no. 119	
16. Instrument Valves		
	See page no. 119	
17. Accessories		
	See page no. 119	

Order key for FTM-25/26:

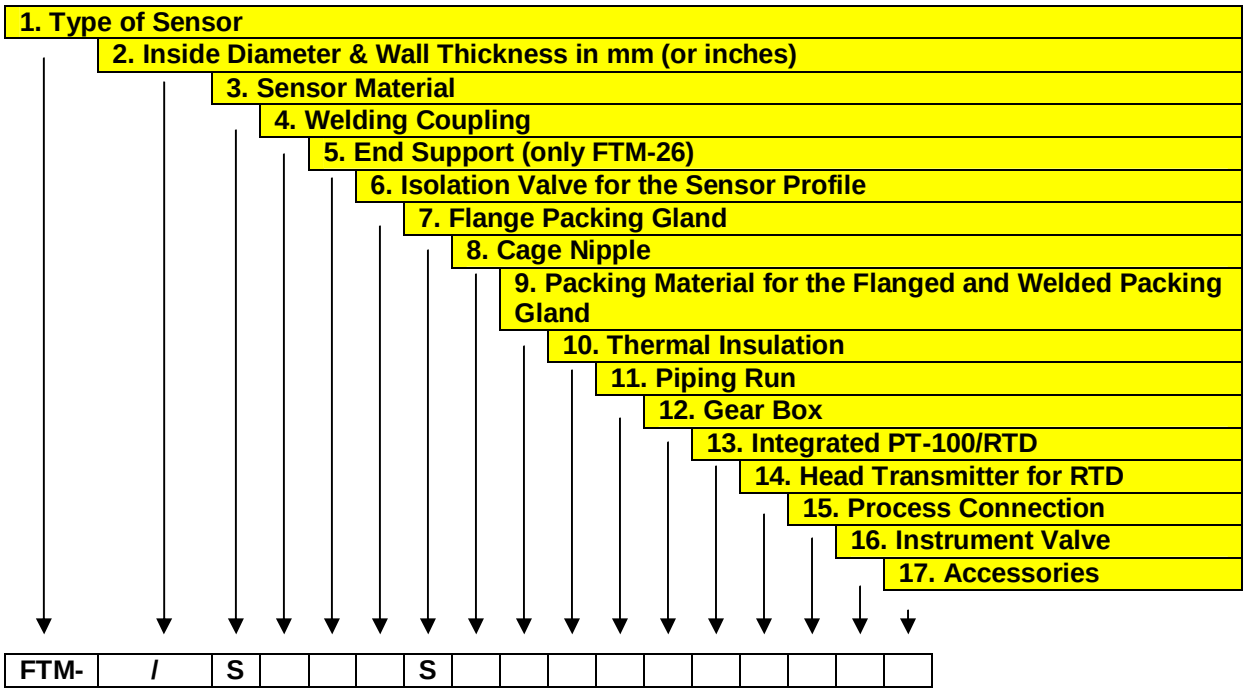

d3) FTM-35/36

1. Type of Sensor		
FTM-35	without end support	
FTM-36	with end support	
2. Inside Diameter and Wall Thickness		
ID/WT	Inside diameter and wall thickness in mm (or inches), please specify	
3. Sensor Material		
S	316Ti (1.4571)	
4. Welding Coupling		
0	without	
1	C.S.	
2	316Ti (1.4571)	
5. End Support (only FTM-36)		
0	without	
C	C.S.	
S	316Ti (1.4571)	
6. Isolation Valve for the Sensor Profile		
A09	ball valve 2”, mat. CS	PN 16 / 150 lbs
A10	ball valve 2”, mat. A182-F316/316 (1.4401)	PN 16 / 150 lbs
S09	gate valve 2”, mat. CS	PN 16 / 150 lbs
S10	gate valve 2”, mat. A182-F316/316 (1.4401)	PN 16 / 150 lbs
A09	ball valve 2”, mat. CS	PN 40 / 300 lbs
A10	ball valve 2”, mat. A182-F316/316 (1.4401)	PN 40 / 300 lbs
S09	gate valve 2”, mat. CS	PN 40 / 300 lbs
S10	gate valve 2”, mat. A182-F316/316 (1.4401)	PN 40 / 300 lbs
7. Flanged Packing Gland		
S	316Ti (1.4571)	
8. Cage Nipple		
PC	C.S.	
PS	316Ti (1.4571)	
9. Packing Material for the Flanged and Welded Packing Gland		
1	PTFE, max. 200 °C	
2	Graphite, max. 400 °C	
10. Thermal Insulation		
KI	without	
X..	thermal insulation thickness in mm (or inches), please specify	
11. Piping Run at Place of Installation		
HL	horizontal pipe run	
VL	vertical pipe run	
12. Gear Box		
0	without gearbox	
1	with gearbox, mat.: die-cast aluminium	
2	with gearbox, mat.: stainless steel	
13. Integrated PT-100 RTD		
T0	without	
TA	3-wire	
TB	2-wire, with Ex-approval	
14. Head Transmitter for RTD		
	See page no. 45	
13. Process Connection		
	See page no. 119	
14. Instrument Valves		
	See page no. 119	
15. Accessories		
	See page no. 119	

Order key for FTM-35/36:

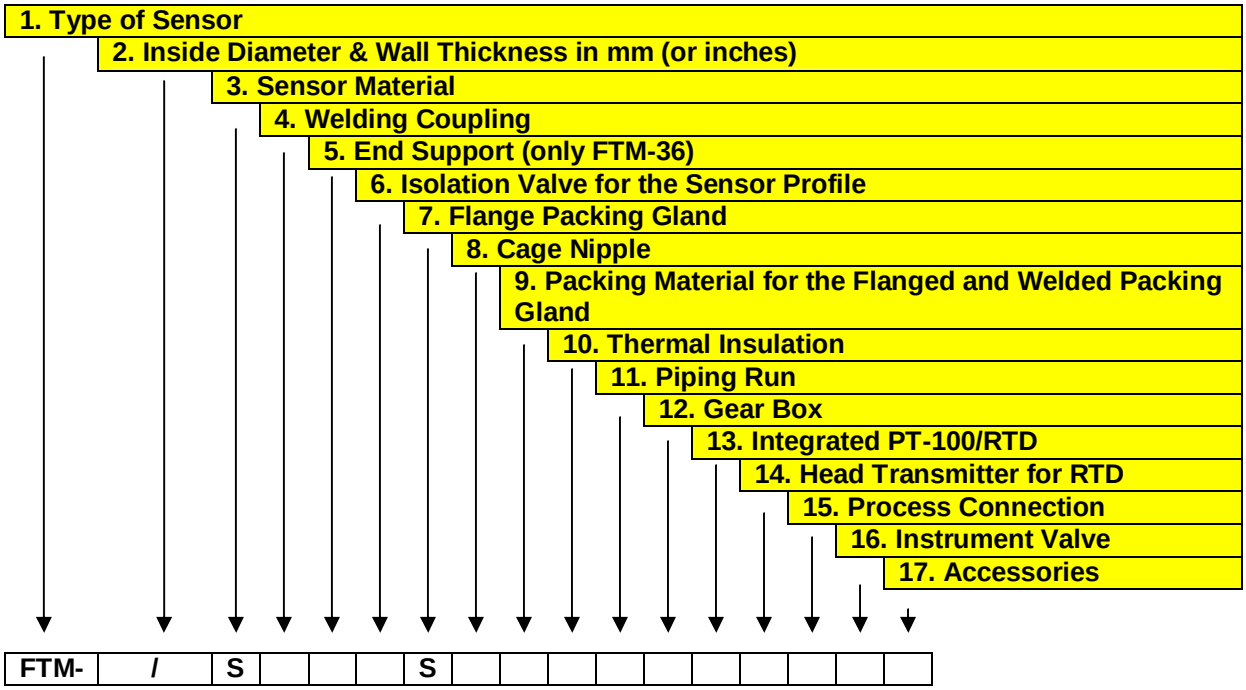

e) Ordering Codes for Instrument Connection and Shut-off Device for Itabar-Flow-Sensors type FTN & FTM

Code	Description
Instrument Connection	
A04	Sensor head with ¼” NPT-M
A03	Sensor head with ½” NPT-M
A06	Flange plate for direct mounting of a 3-way-manifold, material 316Ti
A15	Flange plate for direct mounting of a 5-way-manifold, material 316Ti

Shut-off Device for Impulse Pipes	
A00	without
A55	ball valve PN 40; case C.S. / ½” NPT-F, packing: PTFE
A56	ball valve PN 40; case A182-F316H (1.4401) / ½” NPT-F, packing: PTFE
A57	ball valve PN 40; case C.S. / ¼” NPT-F, packing: PTFE
A58	ball valve PN 40; case A182-F316H (1.4401) / ¼” NPT-F, packing: PTFE
A59	shut-off valve PN 400, case C.S., ¼” NPT-F, packing: graphite
A60	shut-off valve PN 400, case A182-F316H (1.4401), ¼” NPT-F, packing: graphite
A61	shut-off valve PN 400, case C.S., ½” NPT-F, packing: graphite
A62	shut-off valve PN 400, case A182-F316H (1.4401), ½” NPT-F, packing: graphite
A63	shut-off valve ½” NPT, PN10, PTFE
A64	shut-off valve G ½”, PN10, PVDF
A66	direct mounted, with 3-way-manifold, PN400, case A182-F316L/316L (1.4404) packing: PTFE (only with A06)
A67	direct mounted, with 3-way-manifold, PN10, case PTFE, packing: PTFE (only with A06)
A71	direct mounted, with 5-way-manifold, PN400, case A182-F316L/316L (1.4404) packing: PTFE (only with A15)

Accessories	
E12	1 pair of screw joints ½” NPT-M / ∅ **12 mm**, 316SS (1.4571)
E14	1 pair of screw joints ½” NPT-M / ∅ **14 mm**, 316SS (1.4571)

B.3.3 Itabar®-Flow-Sensors (FloTap-Version with Flanged Process Connection and Guide-Rod-Spindles) Types: FTH-20/21/25/26/35/36/65/66 (up to 1450 psi [PN 100])

a) Description:

The FTH pitot tube sensor is designed to measure the volumetric flow of liquids and gases. The installation is done via a flanged connection. The flanged packing gland above the shut off valve ensures proper sealing of the sensor as well as a shortening of the leverage arm. The installation / removal of the sensor is facilitated via a pair of guiding spindles or a gear box with hand wheel (optional). The FTH sensor is designed for applications with a maximum operating pressure of 1470 psi (PN 100) and a maximum operating temperature of 752 °F (400°C).

Fig. 51 Itabar FTH-20 without gearbox

b) Drawing for FTH

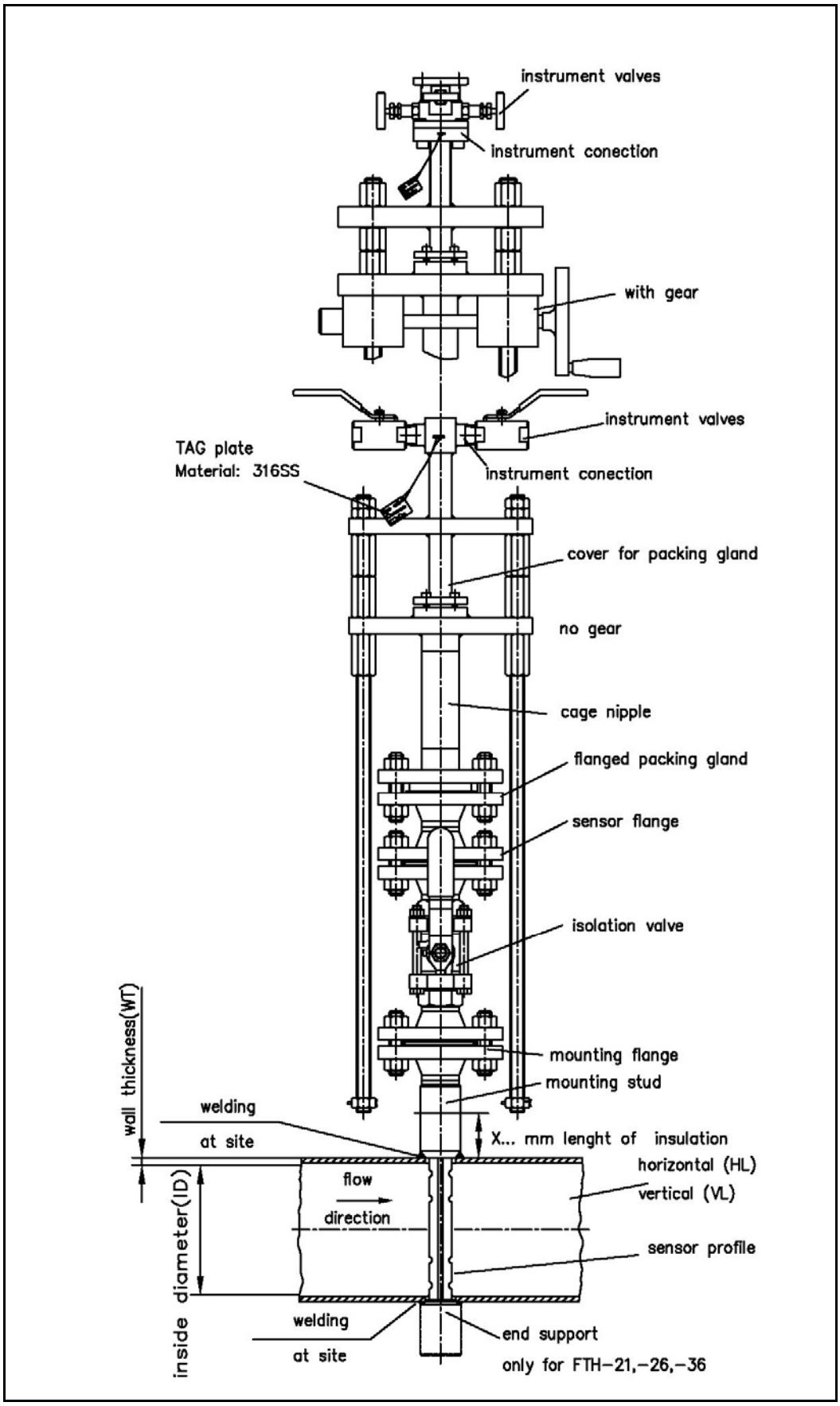

c.) Order Data for Itabar® Series FTH-20/21/25/26/35/36/65/66

c.1) Sensor type:

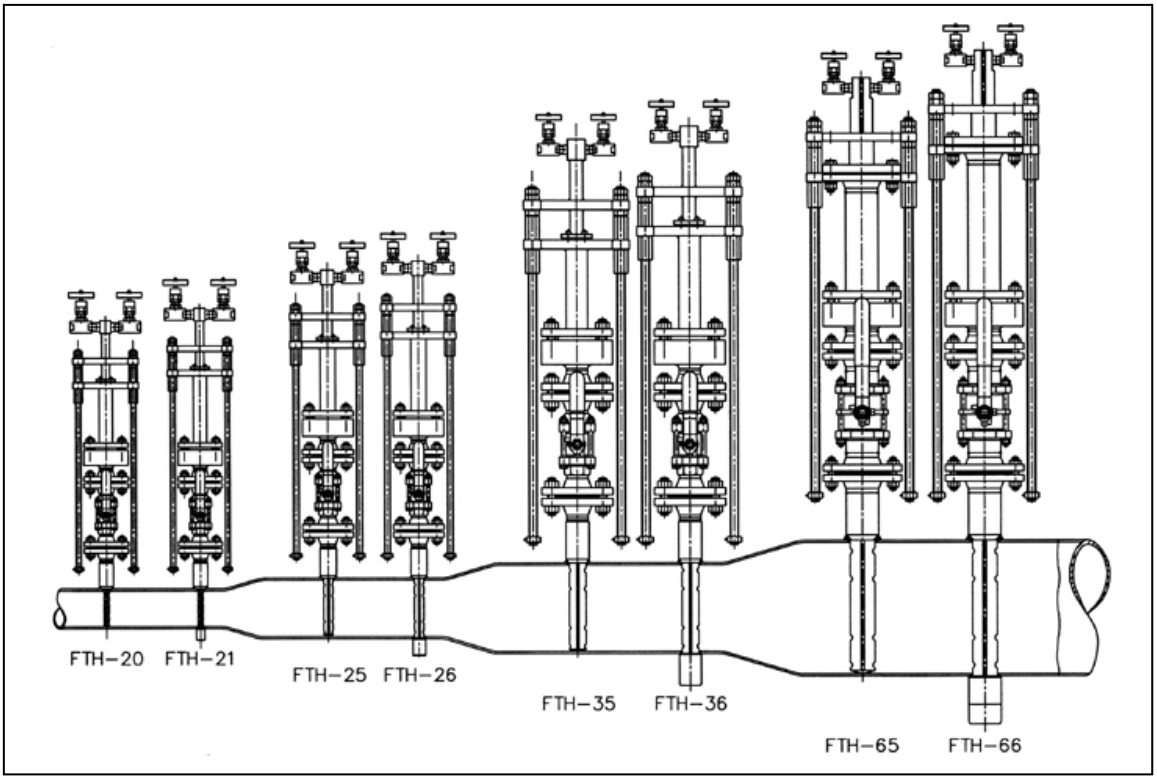

Pipe diameter inches	mm	Maximum allowable volumetric flow in m³/h Sensor type							
		FTH -20	FTH -21	FTH -25	FTH -26	FTH -35	FTH -36	FTH -65	FTH -66
1 1/2	DN 40	40	114	---	---	---	---	---	---
2	DN 50	59	161	---	---	---	---	---	---
2 1/4	DN 65	93	243	---	---	---	---	---	---
3	DN 80	130	328	---	---	---	---	---	---
4	DN 100	179	439	205	544	---	---	---	---
5	DN 125	238	570	281	719	---	---	---	---
6	DN 150	---	---	358	894	---	---	---	---
8	DN 200	---	---	515	1242	---	---	---	---
10	DN 250	---	---	687	1623	---	---	---	---
12	DN 300	---	---	872	2034	1757	4204	2818	5640
14	DN 350	---	---	1053	2433	2142	5067	3481	8110
16	DN 400	---	---	1226	2828	2532	5938	4138	9569
20	DN 500	---	---	1592	3627	3283	7611	5344	12233
24	DN 600	---	---	1949	4423	4052	9327	6794	15455
28	DN 700	---	---	2318	5237	4851	11106	8263	18723
32	DN 800	---	---	2704	6099	5667	12930	9615	21727
36	DN 900	---	---	---	7000	---	14790	---	24501
40	DN 1000	---	---	---	7921	---	16614	---	27182
48	DN 1200	---	---	---	9763	---	20450	---	32876
56	DN 1400	---	---	---	---	---	54184	---	39177
64	DN 1600	---	---	---	---	---	27987	---	46015
72	DN 1800	---	---	---	---	---	31613	---	52029
80	DN 2000	---	---	---	---	---	---	---	---

These values are for water of ρ = 0,9982 kg/l SGU and at a temperature T = 20 °C. To calculate volumetric or mass flow of fluids with other densities see chapter 6 „Specifications of DP Sensors with WINFLOW“.

d.) Order Specification Itabar-Flow-Sensors, Series FTH

d1) FTH-20/21

1. Type of Sensor			
FTH-20	without end support		
FTH-21	with end support		
2. Inside Diameter and Wall Thickness			
ID/WT	Inside diameter and wall thickness in mm (or inches), please specify		
3. Sensor Material			
S	316Ti (1.4571**) – standard –**		
K	904L (1.4539)		
X	A 182 F51 (1.4462) / Duplex		
H	Hastelloy C4 (2.4610)		
M	Monel 400 (2.4360)		
Y	Incoloy 800 (1.4876)		
L	Inconel 600 (2.4816)		
4. Sensor Flange (identical to sensor material)			
SM	acc. DIN		
SA	acc. ANSI		
5. Sensor Flange Surface			
1	acc. DIN		
2	acc. ANSI RF		
3	acc. ANSI RF SF (smooth finish		
4	RTJ		
6. Sensor Flange Pressure Rating (PN / lbs), Material and Size (DN / inches)			
	Pressure rating	**Material**	**Size**
A01	PN 16 / 150 lbs	316Ti (1.4571)	DN 25 / 1”
A02	PN 40	316Ti (1.4571)	DN 25 / 1”
A03	PN 63 / 300 lbs	316Ti (1.4571)	DN 25 / 1”
A04	PN 100 / 600 lbs	316Ti (1.4571)	DN 25 / 1”
A10	PN 16 / 150 lbs	Duplex (1.4462)	DN 25 / 1”
A11	PN 40	Duplex (1.4462)	DN 25 / 1”
A12	PN 63 / 300 lbs	Duplex (1.4462)	DN 25 / 1”
A13	PN 100 / 600 lbs	Duplex (1.4462)	DN 25 / 1”
A20	PN 16 / 150 lbs	904L (1.4539)	DN 25 / 1”
A21	PN 40	904L (1.4539)	DN 25 / 1”
A22	PN 63 / 300 lbs	904L (1.4539)	DN 25 / 1”
A23	PN 100 / 600 lbs	904L (1.4539)	DN 25 / 1”
A30	PN 16 / 150 lbs	Hastelloy C4 (2.4610)	DN 25 / 1”
A31	PN 40	Hastelloy C4 (2.4610)	DN 25 / 1”
A32	PN 63 / 300 lbs	Hastelloy C4 (2.4610)	DN 25 / 1”
A33	PN 100 / 600 lbs	Hastelloy C4 (2.4610)	DN 25 / 1”
A40	PN 16 / 150 lbs	Incoloy 800 (1.4876)	DN 25 / 1”
A41	PN 40	Incoloy 800 (1.4876)	DN 25 / 1”
A42	PN 63 / 300 lbs	Incoloy 800 (1.4876)	DN 25 / 1”
A43	PN 100 / 600 lbs	Incoloy 800 (1.4876)	DN 25 / 1”
A50	PN 16 / 150 lbs	Inconel 600 (2.4816)	DN 25 / 1”
A51	PN 40	Inconel 600 (2.4816)	DN 25 / 1”
A52	PN 63 / 300 lbs	Inconel 600 (2.4816)	DN 25 / 1”
A53	PN 100 / 600 lbs	Inconel 600 (2.4816)	DN 25 / 1”
A60	PN 16 / 150 lbs	Monel 400 (2.4360)	DN 25 / 1”
A61	PN 40	Monel 400 (2.4360)	DN 25 / 1”
A62	PN 63 / 300 lbs	Monel 400 (2.4360)	DN 25 / 1”
A63	PN 100 / 600 lbs	Monel 400 (2.4360)	DN 25 / 1”

Continued next page

Code	Description		
7. Mounting Stud (material of stud has to be identical / resp. weldable to the pipe material)			
0	without		
R	mounting stud with flange (standard)		
W	weldolet-stud with flange		
8. Mounting Stud Flange (size and pressure rating has to be identical to sensor flange)			
0	without		
M	acc. DIN, flange face form C		
A	acc. ANSI, flange face RF		
F	acc. ANSI, flange face SF (smooth finish)		
T	acc. ANSI, flange face RTJ		
9. Mounting Stud Flange, Material, Pressure Rating (PN / lbs) and Size (DN / inches)			
	Material	**Pressure rating**	**Size**
0	without		
C1	C.S.	PN 16 / 150 lbs	DN 25 / 1”
S1	316Ti – standard –	PN 16 / 150 lbs	DN 25 / 1”
X1	904L	PN 16 / 150 lbs	DN 25 / 1”
K1	A 182 F51 / Duplex	PN 16 / 150 lbs	DN 25 / 1”
H1	Hastelloy C4	PN 16 / 150 lbs	DN 25 / 1”
Y1	Incoloy 800	PN 16 / 150 lbs	DN 25 / 1”
L1	Inconel 600	PN 16 / 150 lbs	DN 25 / 1”
M1	Monel 400	PN 16 / 150 lbs	DN 25 / 1”
C2	C.S.	PN 40 / 150 lbs	DN 25 / 1”
S2	316Ti – standard –	PN 40 / 150 lbs	DN 25 / 1”
X2	904L	PN 40 / 150 lbs	DN 25 / 1”
K2	A 182 F51 / Duplex	PN 40 / 150 lbs	DN 25 / 1”
H2	Hastelloy C4	PN 40 / 150 lbs	DN 25 / 1”
Y2	Incoloy 800	PN 40 / 150 lbs	DN 25 / 1”
L2	Inconel 600	PN 40 / 150 lbs	DN 25 / 1”
M2	Monel 400	PN 40 / 150 lbs	DN 25 / 1”
C3	C.S.	PN 63 / 300 lbs	DN 25 / 1”
S3	316Ti – standard –	PN 63 / 300 lbs	DN 25 / 1”
X3	904L	PN 63 / 300 lbs	DN 25 / 1”
K3	A 182 F51 / Duplex	PN 63 / 300 lbs	DN 25 / 1”
H3	Hastelloy C4	PN 63 / 300 lbs	DN 25 / 1”
Y3	Incoloy 800	PN 63 / 300 lbs	DN 25 / 1”
L3	Inconel 600	PN 63 / 300 lbs	DN 25 / 1”
M3	Monel 400	PN 63 / 300 lbs	DN 25 / 1”
C4	C.S.	PN 100 / 600 lbs	DN 25 / 1”
S4	316Ti – standard –	PN 100 / 600 lbs	DN 25 / 1”
X4	904L	PN 100 / 600 lbs	DN 25 / 1”
K4	A 182 F51 / Duplex	PN 100 / 600 lbs	DN 25 / 1”
H4	Hastelloy C4	PN 100 / 600 lbs	DN 25 / 1”
Y4	Incoloy 800	PN 100 / 600 lbs	DN 25 / 1”
L4	Inconel 600	PN 100 / 600 lbs	DN 25 / 1”
M4	Monel 400	PN 100 / 600 lbs	DN 25 / 1”

10. End support (only FTH-21)	
0	without
C	C.S.
S	316Ti (1.4571)
X	904L (1.4539)
K	A 182 F51 (1.4462) / Duplex
H	Hastelloy C4 (2.4610)
Y	Incoloy 800 (1.4876)
L	Inconel 600 (2.4816)
M	Monel 400 (2.4360)

Continued next page

Code	Description
11. Isolation Valve for Sensor Profile	
	See page no. 125
12. Flanged Packing Gland	
S	316Ti (1.4571)
X	A 182 F51 (1.4462) / Duplex
K	904L (1.4539)
H	Hastelloy C4 (2.4610)
Y	Incoloy 800 (1.4876)
L	Inconel 600 (2.4816)
M	Monel 400 (2.4360)
13. Cage Nipple Material	
PC	C.S. – standard –
PS	316Ti (1.4571)
PX	A 182 F51 (1.4462) / Duplex
P3	904L (1.4539)
PH	Hastelloy C4 (2.4610)
PY	Incoloy 800 (1.4876)
PL	Inconel 600 (2.4816)
PM	Monel 400 (2.4360)
14. Packing Material	
1	PTFE, up to 392 °F (200 °C)
2	Graphite up to 752 °F (400 °C)
15. Gear Box	
0	without gear box
1	with gear box, mat. die-cast aluminium
2	with gear box, mat. stainless steel
16. Thermal Insulation	
KI	without
X..	with thermal insulation, please advise thickness in mm (or inches)
17. Piping Run at Place of Installation	
HL	horizontal
VL	vertical
18. Process connection	
	See page no. 142
19. Instrument Valves	
	See page no. 143
20. Accessories	
	See page no. 143

Order key for FTH-20/21

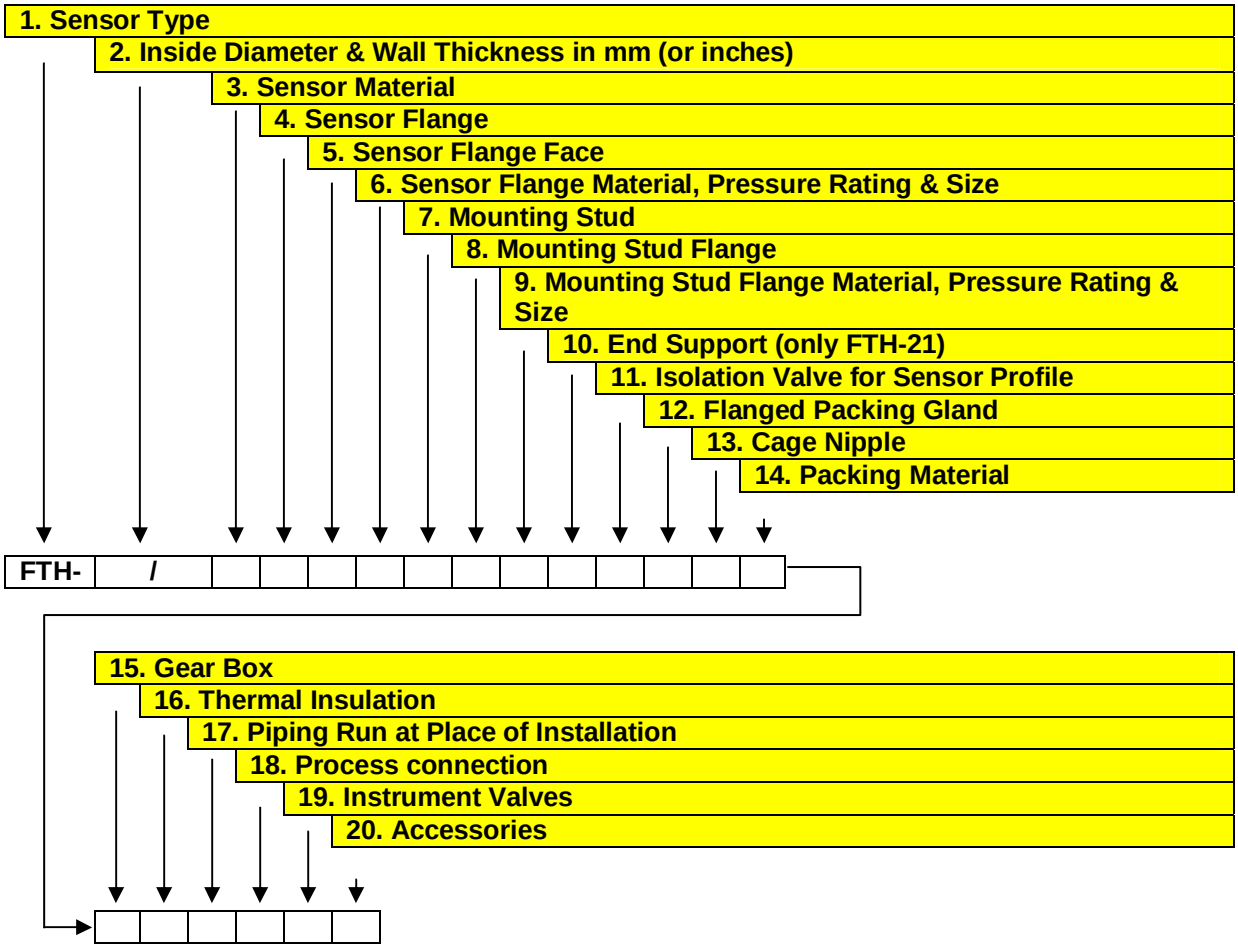

d1.1) Isolation Valve for the Sensor Profile, type FTH-20/21

Code	Description		
Isolation Valve for Sensor Profile, acc. to DIN			
	Type	**Size / Pressure rating**	**Material**
MF01	ball valve	DN 25 / PN 16	C.S
MF02	ball valve	DN 25 / PN 16	A182-F316H
MF03	ball valve	DN 25 / PN 40	C.S
MF04	ball valve	DN 25 / PN 40	A182-F316H
MF05	ball valve	DN 25 / PN 40	A182 F51 “Duplex”
MF06	ball valve	DN 25 / PN 40	Monel 400
MF07	ball valve	DN 25 / PN 40	Hastelloy C4
MF08	ball valve	DN 25 / PN 40	Incoloy 800
MF09	ball valve	DN 25 / PN 40	Inconel 600
MS01	gate valve	DN 25 / PN 100	C.S
MS02	gate valve	DN 25 / PN 100	A182-F316H

Code	Description		
Isolation Valve for Sensor Profile, acc. to ANSI			
	Type	**Size / Pressure rating**	**Material**
AF01	ball valve	1” 150 lbs	C.S
AF02	ball valve	1” 150 lbs	A182-F316H
AF03	ball valve	1” 300 lbs	C.S
AF04	ball valve	1” 300 lbs	A182-F316H
AF05	ball valve	1” 300 lbs	A182 F51 “Duplex”
AF06	ball valve	1” 300 lbs	Monel 400
AF07	ball valve	1” 300 lbs	Hastelloy C4
AF08	ball valve	1” 300 lbs	Incoloy 800
AF09	ball valve	1” 300 lbs	Inconel 600
AS01	gate valve	1” 600 lbs	C.S
AS02	gate valve	1” 600 lbs	A182-F316H

d2) FTH-25/26

1. Type of Sensor			
FTH-25	without end support		
FTH-26	with end support		
2. Inside Diameter and Wall Thickness			
ID/WT	Inside diameter and wall thickness in mm (or inches), please specify		
3. Sensor Material			
S	316Ti (1.4571**) – standard –**		
K	904L (1.4539)		
X	A 182 F51 (1.4462) / Duplex		
H	Hastelloy C4 (2.4610)		
M	Monel 400 (2.4360)		
Y	Incoloy 800 (1.4876)		
L	Inconel 600 (2.4816)		
4. Sensor Flange (identical to sensor material)			
SM	acc. DIN		
SA	acc. ANSI		
5. Sensor Flange Surface			
1	acc. DIN		
2	acc. ANSI RF		
3	acc. ANSI RF SF (smooth finish		
4	RTJ		
6. Sensor Flange Pressure Rating (PN / lbs), Material and Size (DN / inches)			
	Pressure rating	**Material**	**Size**
B01	PN 16 / 150 lbs	316Ti (1.4571)	DN 32 / 1 ½”
B02	PN 40	316Ti (1.4571)	DN 32 / 1 ½”
B03	PN 63 / 300 lbs	316Ti (1.4571)	DN 40 / 1 ½”
B04	PN 100 / 600 lbs	316Ti (1.4571)	DN 40 / 1 ½”
B10	PN 16 / 150 lbs	Duplex (1.4462)	DN 32 / 1 ½”
B11	PN 40	Duplex (1.4462)	DN 32 / 1 ½”
B12	PN 63 / 300 lbs	Duplex (1.4462)	DN 40 / 1 ½”
B13	PN 100 / 600 lbs	Duplex (1.4462)	DN 40 / 1 ½”
B20	PN 16 / 150 lbs	904L (1.4539)	DN 32 / 1 ½”
B21	PN 40	904L (1.4539)	DN 32 / 1 ½”
B22	PN 63 / 300 lbs	904L (1.4539)	DN 40 / 1 ½”
B23	PN 100 / 600 lbs	904L (1.4539)	DN 40 / 1 ½”
B30	PN 16 / 150 lbs	Hastelloy C4 (2.4610)	DN 32 / 1 ½”
B31	PN 40	Hastelloy C4 (2.4610)	DN 32 / 1 ½”
B32	PN 63 / 300 lbs	Hastelloy C4 (2.4610)	DN 40 / 1 ½”
B33	PN 100 / 600 lbs	Hastelloy C4 (2.4610)	DN 40 / 1 ½”
B40	PN 16 / 150 lbs	Incoloy 800 (1.4876)	DN 32 / 1 ½”
B41	PN 40	Incoloy 800 (1.4876)	DN 32 / 1 ½”
B42	PN 63 / 300 lbs	Incoloy 800 (1.4876)	DN 40 / 1 ½”
B43	PN 100 / 600 lbs	Incoloy 800 (1.4876)	DN 40 / 1 ½”
B50	PN 16 / 150 lbs	Inconel 600 (2.4816)	DN 32 / 1 ½”
B51	PN 40	Inconel 600 (2.4816)	DN 32 / 1 ½”
B52	PN 63 / 300 lbs	Inconel 600 (2.4816)	DN 40 / 1 ½”
B53	PN 100 / 600 lbs	Inconel 600 (2.4816)	DN 40 / 1 ½”
B60	PN 16 / 150 lbs	Monel 400 (2.4360)	DN 32 / 1 ½”
B61	PN 40	Monel 400 (2.4360)	DN 32 / 1 ½”
B62	PN 63 / 300 lbs	Monel 400 (2.4360)	DN 40 / 1 ½”
B63	PN 100 / 600 lbs	Monel 400 (2.4360)	DN 40 / 1 ½”

Continued next page

Code	Description		
7. Mounting Stud (material of stud has to be identical / resp. weldable to the pipe material)			
0	without		
R	mounting stud with flange (standard)		
W	weldolet-stud with flange		
8. Mounting Stud Flange (size and pressure rating has to be identical to sensor flange)			
0	without		
M	acc. DIN, flange face form C		
A	acc. ANSI, flange face RF		
F	acc. ANSI, flange face SF (smooth finish)		
T	acc. ANSI, flange face RTJ		
9. Mounting Stud Flange, Material, Pressure Rating (PN / lbs) and Size (DN / inches)			
	Material	**Pressure rating**	**Size**
0	without		
C1	C.S.	PN 16 / 150 lbs	DN 32 / 1 ½”
S1	316Ti – standard –	PN 16 / 150 lbs	DN 32 / 1 ½”
X1	904L	PN 16 / 150 lbs	DN 32 / 1 ½”
K1	A 182 F51 / Duplex	PN 16 / 150 lbs	DN 32 / 1 ½”
H1	Hastelloy C4	PN 16 / 150 lbs	DN 32 / 1 ½”
Y1	Incoloy 800	PN 16 / 150 lbs	DN 32 / 1 ½”
L1	Inconel 600	PN 16 / 150 lbs	DN 32 / 1 ½”
M1	Monel 400	PN 16 / 150 lbs	DN 32 / 1 ½”
C2	C.S.	PN 40 / 150 lbs	DN 32 / 1 ½”
S2	316Ti – standard –	PN 40 / 150 lbs	DN 32 / 1 ½”
X2	904L	PN 40 / 150 lbs	DN 32 / 1 ½”
K2	A 182 F51 / Duplex	PN 40 / 150 lbs	DN 32 / 1 ½”
H2	Hastelloy C4	PN 40 / 150 lbs	DN 32 / 1 ½”
Y2	Incoloy 800	PN 40 / 150 lbs	DN 32 / 1 ½”
L2	Inconel 600	PN 40 / 150 lbs	DN 32 / 1 ½”
M2	Monel 400	PN 40 / 150 lbs	DN 32 / 1 ½”
C3	C.S.	PN 63 / 300 lbs	DN 40 / 1 ½”
S3	316Ti – standard –	PN 63 / 300 lbs	DN 40 / 1 ½”
X3	904L	PN 63 / 300 lbs	DN 40 / 1 ½”
K3	A 182 F51 / Duplex	PN 63 / 300 lbs	DN 40 / 1 ½”
H3	Hastelloy C4	PN 63 / 300 lbs	DN 40 / 1 ½”
Y3	Incoloy 800	PN 63 / 300 lbs	DN 40 / 1 ½”
L3	Inconel 600	PN 63 / 300 lbs	DN 40 / 1 ½”
M3	Monel 400	PN 63 / 300 lbs	DN 40 / 1 ½”
C4	C.S.	PN 100 / 600 lbs	DN 40 / 1 ½”
S4	316Ti – standard –	PN 100 / 600 lbs	DN 40 / 1 ½”
X4	904L	PN 100 / 600 lbs	DN 40 / 1 ½”
K4	A 182 F51 / Duplex	PN 100 / 600 lbs	DN 40 / 1 ½”
H4	Hastelloy C4	PN 100 / 600 lbs	DN 40 / 1 ½”
Y4	Incoloy 800	PN 100 / 600 lbs	DN 40 / 1 ½”
L4	Inconel 600	PN 100 / 600 lbs	DN 40 / 1 ½”
M4	Monel 400	PN 100 / 600 lbs	DN 40 / 1 ½”

10. End support (only FTH-26)	
0	without
C	C.S.
S	316Ti (1.4571)
X	904L (1.4539)
K	A 182 F51 (1.4462) / Duplex
H	Hastelloy C4 (2.4610)
Y	Incoloy 800 (1.4876)
L	Inconel 600 (2.4816)
M	Monel 400 (2.4360)

Continued next page

Code	Description
11. Isolation Valve for Sensor Profile	
	See page no. 130
12. Flanged Packing Gland	
S	316Ti (1.4571)
X	A 182 F51 (1.4462) / Duplex
K	904L (1.4539)
H	Hastelloy C4 (2.4610)
Y	Incoloy 800 (1.4876)
L	Inconel 600 (2.4816)
M	Monel 400 (2.4360)
13. Cage Nipple Material	
PC	C.S. – standard –
PS	316Ti (1.4571)
PX	A 182 F51 (1.4462) / Duplex
P3	904L (1.4539)
PH	Hastelloy C4 (2.4610)
PY	Incoloy 800 (1.4876)
PL	Inconel 600 (2.4816)
PM	Monel 400 (2.4360)
14. Packing Material	
1	PTFE, up to 392 °F (200 °C)
2	Graphite up to 752 °F (400 °C)
15. Gear Box	
0	without gear box
1	with gear box, mat. die-cast aluminium
2	with gear box, mat. stainless steel
16. Thermal Insulation	
KI	without
X..	with thermal insulation, please advise thickness in mm (or inches)
17. Piping Run at Place of Installation	
HL	horizontal
VL	vertical
18. Integrated PT-100 RTD	
T0	without
TA	3-wire
TB	3-wire, with Ex-approval
19. Head Transmitter for RTD	
	See page no. 45
20. Process connection	
	See page no. 142
21. Instrument Valves	
	See page no. 143
22. Accessories	
	See page no. 143

Order key for FTH-25/26

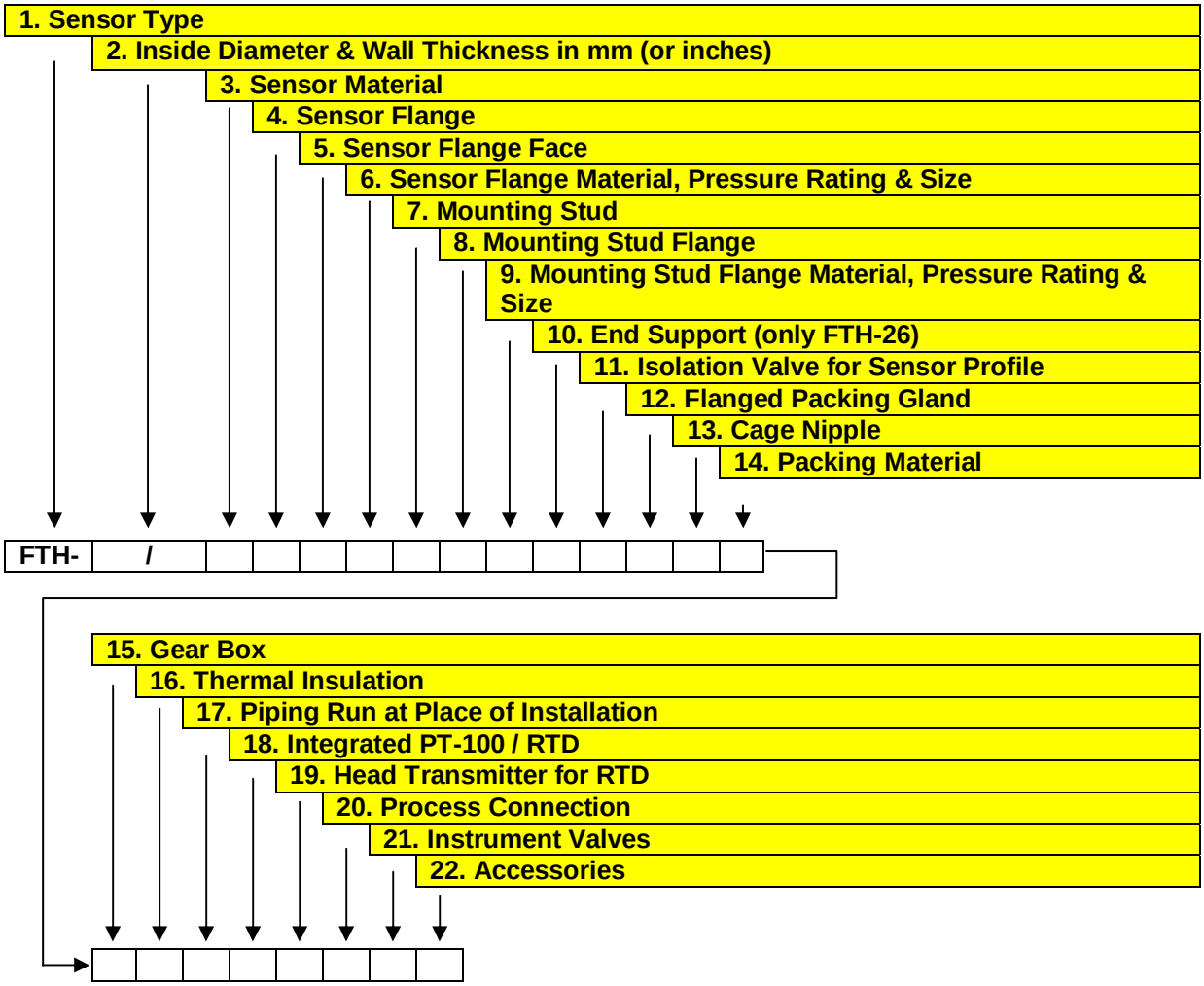

d2.1) Isolation Valve for the Sensor Profile, type FTH-25/26

Code	Description		
Isolation Valve for Sensor Profile, acc. to DIN			
	Type	**Size / Pressure rating**	**Material**
MF08	ball valve	DN 32 / PN 16	C.S
MF09	ball valve	DN 32 / PN 16	A182-F316H
MF10	ball valve	DN 32 / PN 16	A182 F51 “Duplex”
MF11	ball valve	DN 32 / PN 16	Monel 400
MF12	ball valve	DN 32 / PN 16	Hastelloy C4
MF13	ball valve	DN 32 / PN 40	C.S
MF14	ball valve	DN 32 / PN 40	A182-F316H
MF15	ball valve	DN 32 / PN 40	A182 F51 “Duplex”
MF16	ball valve	DN 32 / PN 40	Monel 400
MF17	ball valve	DN 32 / PN 40	Hastelloy C4
MF25	ball valve	DN 32 / PN 40	Incoloy 800
MF26	ball valve	DN 32 / PN 40	Inconel 600
MF18	ball valve	DN 40 / PN 63	C.S
MF19	ball valve	DN 40 / PN 63	A182-F316H
MF20	ball valve	DN 40 / PN 63	A182 F51 “Duplex”
MF21	ball valve	DN 40 / PN 63	Monel 400
MF22	ball valve	DN 40 / PN 63	Hastelloy C4
MF23	ball valve	DN 40 / PN 63	Incoloy 800
MF24	ball valve	DN 40 / PN 63	Inconel 600
MS10	gate valve	DN 40 / PN 100	C.S
MS11	gate valve	DN 40 / PN 100	A182-F316H

Code	Description		
Isolation Valve for Sensor Profile, acc. to ANSI			
	Type	**Size / Pressure rating**	**Material**
AF08	ball valve	1 ½” 150 lbs	C.S
AF09	ball valve	1 ½” 150 lbs	A182-F316H
AF10	ball valve	1 ½” 150 lbs	A182 F51 “Duplex”
AF11	ball valve	1 ½” 150 lbs	Monel 400
AF12	ball valve	1 ½” 150 lbs	Hastelloy C4
AF13	ball valve	1 ½” 300 lbs	C.S
AF14	ball valve	1 ½” 300 lbs	A182-F316H
AF15	ball valve	1 ½” 300 lbs	A182 F51 “Duplex”
AF16	ball valve	1 ½” 300 lbs	Monel 400
AF17	ball valve	1 ½” 300 lbs	Hastelloy C4
AF18	ball valve	1 ½” 300 lbs	C.S
AF19	ball valve	1 ½” 300 lbs	A182-F316H
AS10	gate valve	1 ½” 600 lbs	C.S
AS11	gate valve	1 ½” 600 lbs	A182-F316H

d3) FTH-35/36

1. Type of Sensor			
FTH-35	without end support		
FTH-36	with end support		
2. Inside Diameter and Wall Thickness			
ID/WT	Inside diameter and wall thickness in mm (or inches), please specify		
3. Sensor Material			
S	316Ti (1.4571**) – standard –**		
K	904L (1.4539)		
X	A 182 F51 (1.4462) / Duplex		
H	Hastelloy C4 (2.4610)		
M	Monel 400 (2.4360)		
Y	Incoloy 800 (1.4876)		
L	Inconel 600 (2.4816)		
4. Sensor Flange (identical to sensor material)			
SM	acc. DIN		
SA	acc. ANSI		
5. Sensor Flange Surface			
1	acc. DIN		
2	acc. ANSI RF		
3	acc. ANSI RF SF (smooth finish		
4	RTJ		
6. Sensor Flange Pressure Rating (PN / lbs), Material and Size (DN / inches)			
	Pressure rating	**Material**	**Size**
C01	PN 16 / 150 lbs	316Ti (1.4571)	DN 50 / 2”
C02	PN 40	316Ti (1.4571)	DN 50 / 2”
C03	PN 63 / 300 lbs	316Ti (1.4571)	DN 50 / 2”
C04	PN 100 / 600 lbs	316Ti (1.4571)	DN 50 / 2”
C10	PN 16 / 150 lbs	Duplex (1.4462)	DN 50 / 2”
C11	PN 40	Duplex (1.4462)	DN 50 / 2”
C12	PN 63 / 300 lbs	Duplex (1.4462)	DN 50 / 2”
C13	PN 100 / 600 lbs	Duplex (1.4462)	DN 50 / 2”
C20	PN 16 / 150 lbs	904L (1.4539)	DN 50 / 2”
C21	PN 40	904L (1.4539)	DN 50 / 2”
C22	PN 63 / 300 lbs	904L (1.4539)	DN 50 / 2”
C23	PN 100 / 600 lbs	904L (1.4539)	DN 50 / 2”
C30	PN 16 / 150 lbs	Hastelloy C4 (2.4610)	DN 50 / 2”
C31	PN 40	Hastelloy C4 (2.4610)	DN 50 / 2”
C32	PN 63 / 300 lbs	Hastelloy C4 (2.4610)	DN 50 / 2”
C33	PN 100 / 600 lbs	Hastelloy C4 (2.4610)	DN 50 / 2”
C40	PN 16 / 150 lbs	Incoloy 800 (1.4876)	DN 50 / 2”
C41	PN 40	Incoloy 800 (1.4876)	DN 50 / 2”
C42	PN 63 / 300 lbs	Incoloy 800 (1.4876)	DN 50 / 2”
C43	PN 100 / 600 lbs	Incoloy 800 (1.4876)	DN 50 / 2”
C50	PN 16 / 150 lbs	Inconel 600 (2.4816)	DN 50 / 2”
C51	PN 40	Inconel 600 (2.4816)	DN 50 / 2”
C52	PN 63 / 300 lbs	Inconel 600 (2.4816)	DN 50 / 2”
C53	PN 100 / 600 lbs	Inconel 600 (2.4816)	DN 50 / 2”
C60	PN 16 / 150 lbs	Monel 400 (2.4360)	DN 50 / 2”
C61	PN 40	Monel 400 (2.4360)	DN 50 / 2”
C62	PN 63 / 300 lbs	Monel 400 (2.4360)	DN 50 / 2”
C63	PN 100 / 600 lbs	Monel 400 (2.4360)	DN 50 / 2”

Continued next page

Code	Description		
7. Mounting Stud (material of stud has to be identical / resp. weldable to the pipe material)			
0	without		
R	mounting stud with flange (standard)		
W	weldolet-stud with flange		
8. Mounting Stud Flange (size and pressure rating has to be identical to sensor flange)			
0	without		
M	acc. DIN, flange face form C		
A	acc. ANSI, flange face RF		
F	acc. ANSI, flange face SF (smooth finish)		
T	acc. ANSI, flange face RTJ		
9. Mounting Stud Flange, Material, Pressure Rating (PN / lbs) and Size (DN / inches)			
	Material	**Pressure rating**	**Size**
0	without		
C1	C.S.	PN 16 / 150 lbs	DN 50 / 2”
S1	316Ti – standard –	PN 16 / 150 lbs	DN 50 / 2”
X1	904L	PN 16 / 150 lbs	DN 50 / 2”
K1	A 182 F51 / Duplex	PN 16 / 150 lbs	DN 50 / 2”
H1	Hastelloy C4	PN 16 / 150 lbs	DN 50 / 2”
Y1	Incoloy 800	PN 16 / 150 lbs	DN 50 / 2”
L1	Inconel 600	PN 16 / 150 lbs	DN 50 / 2”
M1	Monel 400	PN 16 / 150 lbs	DN 50 / 2”
C2	C.S.	PN 40 / 150 lbs	DN 50 / 2”
S2	316Ti – standard –	PN 40 / 150 lbs	DN 50 / 2”
X2	904L	PN 40 / 150 lbs	DN 50 / 2”
K2	A 182 F51 / Duplex	PN 40 / 150 lbs	DN 50 / 2”
H2	Hastelloy C4	PN 40 / 150 lbs	DN 50 / 2”
Y2	Incoloy 800	PN 40 / 150 lbs	DN 50 / 2”
L2	Inconel 600	PN 40 / 150 lbs	DN 50 / 2”
M2	Monel 400	PN 40 / 150 lbs	DN 50 / 2”
C3	C.S.	PN 63 / 300 lbs	DN 50 / 2”
S3	316Ti – standard –	PN 63 / 300 lbs	DN 50 / 2”
X3	904L	PN 63 / 300 lbs	DN 50 / 2”
K3	A 182 F51 / Duplex	PN 63 / 300 lbs	DN 50 / 2”
H3	Hastelloy C4	PN 63 / 300 lbs	DN 50 / 2”
Y3	Incoloy 800	PN 63 / 300 lbs	DN 50 / 2”
L3	Inconel 600	PN 63 / 300 lbs	DN 50 / 2”
M3	Monel 400	PN 63 / 300 lbs	DN 50 / 2”
C4	C.S.	PN 100 / 600 lbs	DN 50 / 2”
S4	316Ti – standard –	PN 100 / 600 lbs	DN 50 / 2”
X4	904L	PN 100 / 600 lbs	DN 50 / 2”
K4	A 182 F51 / Duplex	PN 100 / 600 lbs	DN 50 / 2”
H4	Hastelloy C4	PN 100 / 600 lbs	DN 50 / 2”
Y4	Incoloy 800	PN 100 / 600 lbs	DN 50 / 2”
L4	Inconel 600	PN 100 / 600 lbs	DN 50 / 2”
M4	Monel 400	PN 100 / 600 lbs	DN 50 / 2”
10. End support (only FTH-36)			
0	without		
C	C.S.		
S	316Ti (1.4571)		
X	904L (1.4539)		
K	A 182 F51 (1.4462) / Duplex		
H	Hastelloy C4 (2.4610)		
Y	Incoloy 800 (1.4876)		
L	Inconel 600 (2.4816)		
M	Monel 400 (2.4360)		

Continued next page

Code	Description
11. Isolation Valve for Sensor Profile	
	See page no. 135
12. Flanged Packing Gland	
S	316Ti (1.4571)
X	A 182 F51 (1.4462) / Duplex
K	904L (1.4539)
H	Hastelloy C4 (2.4610)
Y	Incoloy 800 (1.4876)
L	Inconel 600 (2.4816)
M	Monel 400 (2.4360)
13. Cage Nipple Material	
PC	C.S. – standard –
PS	316Ti (1.4571)
PX	A 182 F51 (1.4462) / Duplex
P3	904L (1.4539)
PH	Hastelloy C4 (2.4610)
PY	Incoloy 800 (1.4876)
PL	Inconel 600 (2.4816)
PM	Monel 400 (2.4360)
14. Packing Material	
1	PTFE, up to 392 °F (200 °C)
2	Graphite up to 752 °F (400 °C)
15. Gear Box	
0	without gear box
1	with gear box, mat. die-cast aluminium
2	with gear box, mat. stainless steel
16. Thermal Insulation	
KI	without
X..	with thermal insulation, please advise thickness in mm (or inches)
17. Piping Run at Place of Installation	
HL	horizontal
VL	vertical
18. Integrated PT-100 RTD	
T0	without
TA	3-wire
TB	3-wire, with Ex-approval
19. Head Transmitter for RTD	
	See page no. 45
20. Process connection	
	See page no. 142
21. Instrument Valves	
	See page no. 143
22. Accessories	
	See page no. 143

Order key for FTH-35/36

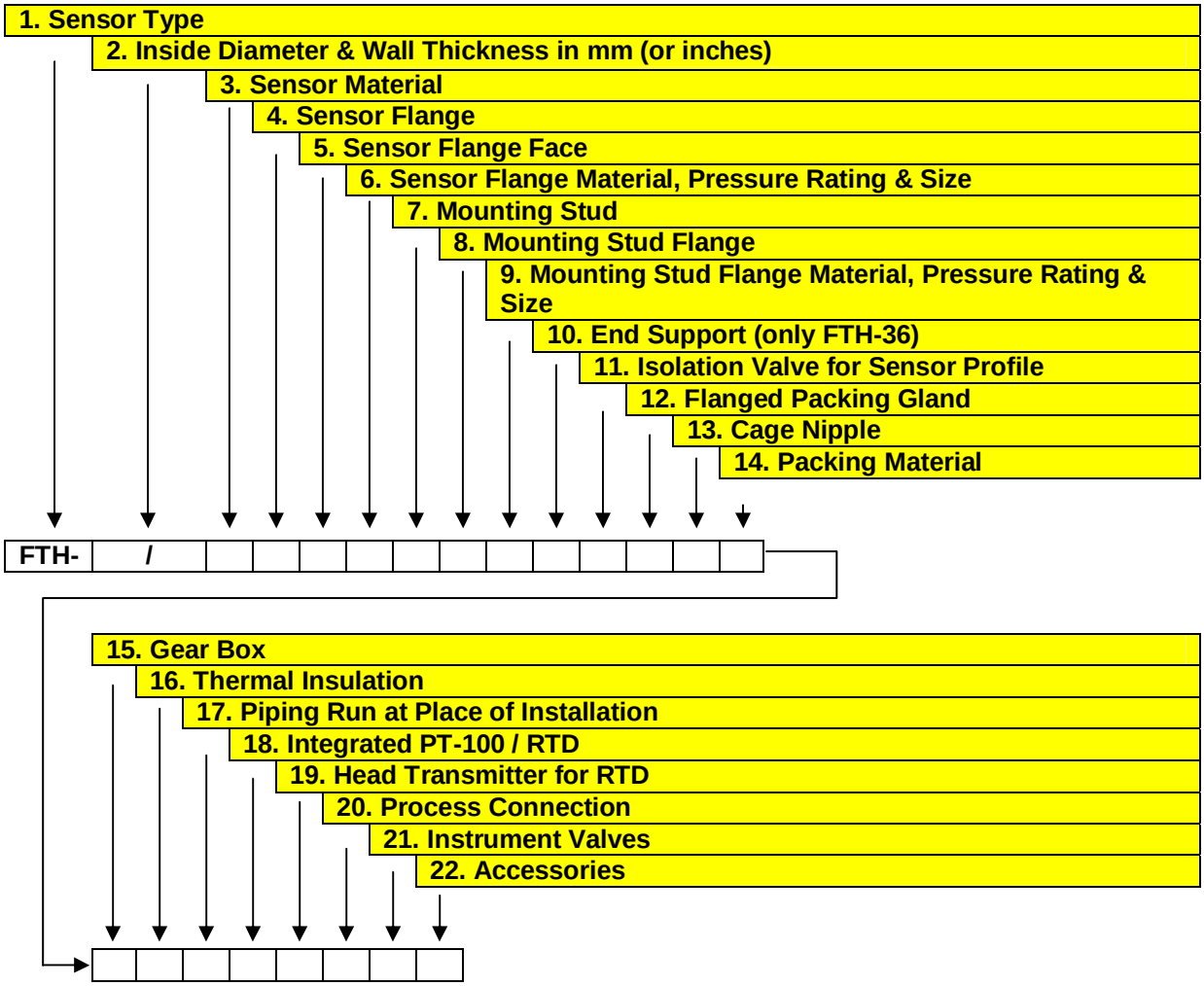

d3.1) Isolation Valve for the Sensor Profile, type FTH-35/36

Code	Description		
Isolation Valve for Sensor Profile, acc. to DIN			
	Type	**Size / Pressure rating**	**Material**
MF30	ball valve	DN 50 / PN 16	C.S
MF31	ball valve	DN 50 / PN 16	A182-F316H
MF32	ball valve	DN 50 / PN 16	A182 F51 “Duplex”
MF33	ball valve	DN 50 / PN 16	Monel 400
MF34	ball valve	DN 50 / PN 16	Hastelloy C4
MF35	ball valve	DN 50 / PN 40	C.S
MF36	ball valve	DN 50 / PN 40	A182-F316H
MF37	ball valve	DN 50 / PN 40	A182 F51 “Duplex”
MF38	ball valve	DN 50 / PN 40	Monel 400
MF39	ball valve	DN 50 / PN 40	Hastelloy C4
MF47	ball valve	DN 50 / PN 40	Incoloy 800
MF48	ball valve	DN 50 / PN 40	Inconel 600
MF40	ball valve	DN 50 / PN 63	C.S
MF41	ball valve	DN 50 / PN 63	A182-F316H
MF42	ball valve	DN 50 / PN 63	A182 F51 “Duplex”
MF43	ball valve	DN 50 / PN 63	Monel 400
MF44	ball valve	DN 50 / PN 63	Hastelloy C4
MF45	ball valve	DN 50 / PN 63	Incoloy 800
MF46	ball valve	DN 50 / PN 63	Inconel 600
MS20	gate valve	DN 50 / PN 100	C.S
MS21	gate valve	DN 50 / PN 100	A182-F316H

Code	Description		
Isolation Valve for Sensor Profile, acc. to DIN			
	Type	**Size / Pressure rating**	**Material**
AF30	ball valve	2” 150 lbs	C.S
AF31	ball valve	2” 150 lbs	A182-F316H
AF32	ball valve	2” 150 lbs	A182 F51 “Duplex”
AF33	ball valve	2” 150 lbs	Monel 400
AF34	ball valve	2” 150 lbs	Hastelloy C4
AF35	ball valve	2” 300 lbs	C.S
AF36	ball valve	2” 300 lbs	A182-F316H
AF37	ball valve	2” 300 lbs	A182 F51 “Duplex”
AF38	ball valve	2” 300 lbs	Monel 400
AF39	ball valve	2” 300 lbs	Hastelloy C4
AF40	ball valve	2” 300 lbs	Incoloy 800
AF41	ball valve	2” 300 lbs	Inconel 600
AS20	gate valve	2” 600 lbs	C.S
AS21	gate valve	2” 600 lbs	A182-F316H

d4) FTH-65/66

1. Type of Sensor			
FTH-65	without end support		
FTH-66	with end support		
2. Inside Diameter and Wall Thickness			
ID/WT	Inside diameter and wall thickness in mm (or inches), please specify		
3. Sensor Material			
S	316Ti (1.4571**) – standard –**		
K	904L (1.4539)		
X	A 182 F51 (1.4462) / Duplex		
H	Hastelloy C4 (2.4610)		
M	Monel 400 (2.4360)		
Y	Incoloy 800 (1.4876)		
L	Inconel 600 (2.4816)		
4. Sensor Flange (identical to sensor material)			
SM	acc. DIN		
SA	acc. ANSI		
5. Sensor Flange Surface			
1	acc. DIN		
2	acc. ANSI RF		
3	acc. ANSI RF SF (smooth finish		
4	RTJ		
6. Sensor Flange Pressure Rating (PN / lbs), Material and Size (DN / inches)			
	Pressure rating	**Material**	**Size**
D01	PN 16 / 150 lbs	316Ti (1.4571)	DN 65 / 2 ½”
D02	PN 40	316Ti (1.4571)	DN 65 / 2 ½”
D03	PN 63 / 300 lbs	316Ti (1.4571)	DN 65 / 2 ½”
D04	PN 100 / 600 lbs	316Ti (1.4571)	DN 65 / 2 ½”
D10	PN 16 / 150 lbs	Duplex (1.4462)	DN 65 / 2 ½”
D11	PN 40	Duplex (1.4462)	DN 65 / 2 ½”
D12	PN 63 / 300 lbs	Duplex (1.4462)	DN 65 / 2 ½”
D13	PN 100 / 600 lbs	Duplex (1.4462)	DN 65 / 2 ½”
D20	PN 16 / 150 lbs	904L (1.4539)	DN 65 / 2 ½”
D21	PN 40	904L (1.4539)	DN 65 / 2 ½”
D22	PN 63 / 300 lbs	904L (1.4539)	DN 65 / 2 ½”
D23	PN 100 / 600 lbs	904L (1.4539)	DN 65 / 2 ½”
D30	PN 16 / 150 lbs	Hastelloy C4 (2.4610)	DN 65 / 2 ½”
D31	PN 40	Hastelloy C4 (2.4610)	DN 65 / 2 ½”
D32	PN 63 / 300 lbs	Hastelloy C4 (2.4610)	DN 65 / 2 ½”
D33	PN 100 / 600 lbs	Hastelloy C4 (2.4610)	DN 65 / 2 ½”
D40	PN 16 / 150 lbs	Incoloy 800 (1.4876)	DN 65 / 2 ½”
D41	PN 40	Incoloy 800 (1.4876)	DN 65 / 2 ½”
D42	PN 63 / 300 lbs	Incoloy 800 (1.4876)	DN 65 / 2 ½”
D43	PN 100 / 600 lbs	Incoloy 800 (1.4876)	DN 65 / 2 ½”
D50	PN 16 / 150 lbs	Inconel 600 (2.4816)	DN 65 / 2 ½”
D51	PN 40	Inconel 600 (2.4816)	DN 65 / 2 ½”
D52	PN 63 / 300 lbs	Inconel 600 (2.4816)	DN 65 / 2 ½”
D53	PN 100 / 600 lbs	Inconel 600 (2.4816)	DN 65 / 2 ½”
D60	PN 16 / 150 lbs	Monel 400 (2.4360)	DN 65 / 2 ½”
D61	PN 40	Monel 400 (2.4360)	DN 65 / 2 ½”
D62	PN 63 / 300 lbs	Monel 400 (2.4360)	DN 65 / 2 ½”
D63	PN 100 / 600 lbs	Monel 400 (2.4360)	DN 65 / 2 ½”

Continued next page

Code	Description		
7. Mounting Stud (material of stud has to be identical / resp. weldable to the pipe material)			
0	without		
R	mounting stud with flange (standard)		
W	weldolet-stud with flange		
8. Mounting Stud Flange (size and pressure rating has to be identical to sensor flange)			
0	without		
M	acc. DIN, flange face form C		
A	acc. ANSI, flange face RF		
F	acc. ANSI, flange face SF (smooth finish)		
T	acc. ANSI, flange face RTJ		
9. Mounting Stud Flange, Material, Pressure Rating (PN / lbs) and Size (DN / inches)			
	Material	**Pressure rating**	**Size**
0	without		
C1	C.S.	PN 16 / 150 lbs	DN 65 / 2 ½”
S1	316Ti – standard –	PN 16 / 150 lbs	DN 65 / 2 ½”
X1	904L	PN 16 / 150 lbs	DN 65 / 2 ½”
K1	A 182 F51 / Duplex	PN 16 / 150 lbs	DN 65 / 2 ½”
H1	Hastelloy C4	PN 16 / 150 lbs	DN 65 / 2 ½”
Y1	Incoloy 800	PN 16 / 150 lbs	DN 65 / 2 ½”
L1	Inconel 600	PN 16 / 150 lbs	DN 65 / 2 ½”
M1	Monel 400	PN 16 / 150 lbs	DN 65 / 2 ½”
C2	C.S.	PN 40 / 150 lbs	DN 65 / 2 ½”
S2	316Ti – standard –	PN 40 / 150 lbs	DN 65 / 2 ½”
X2	904L	PN 40 / 150 lbs	DN 65 / 2 ½”
K2	A 182 F51 / Duplex	PN 40 / 150 lbs	DN 65 / 2 ½”
H2	Hastelloy C4	PN 40 / 150 lbs	DN 65 / 2 ½”
Y2	Incoloy 800	PN 40 / 150 lbs	DN 65 / 2 ½”
L2	Inconel 600	PN 40 / 150 lbs	DN 65 / 2 ½”
M2	Monel 400	PN 40 / 150 lbs	DN 65 / 2 ½”
C3	C.S.	PN 63 / 300 lbs	DN 65 / 2 ½”
S3	316Ti – standard –	PN 63 / 300 lbs	DN 65 / 2 ½”
X3	904L	PN 63 / 300 lbs	DN 65 / 2 ½”
K3	A 182 F51 / Duplex	PN 63 / 300 lbs	DN 65 / 2 ½”
H3	Hastelloy C4	PN 63 / 300 lbs	DN 65 / 2 ½”
Y3	Incoloy 800	PN 63 / 300 lbs	DN 65 / 2 ½”
L3	Inconel 600	PN 63 / 300 lbs	DN 65 / 2 ½”
M3	Monel 400	PN 63 / 300 lbs	DN 65 / 2 ½”
C4	C.S.	PN 100 / 600 lbs	DN 65 / 2 ½”
S4	316Ti – standard –	PN 100 / 600 lbs	DN 65 / 2 ½”
X4	904L	PN 100 / 600 lbs	DN 65 / 2 ½”
K4	A 182 F51 / Duplex	PN 100 / 600 lbs	DN 65 / 2 ½”
H4	Hastelloy C4	PN 100 / 600 lbs	DN 65 / 2 ½”
Y4	Incoloy 800	PN 100 / 600 lbs	DN 65 / 2 ½”
L4	Inconel 600	PN 100 / 600 lbs	DN 65 / 2 ½”
M4	Monel 400	PN 100 / 600 lbs	DN 65 / 2 ½”

10. End support (only FTH-66)	
0	without
C	C.S.
S	316Ti (1.4571)
X	904L (1.4539)
K	A 182 F51 (1.4462) / Duplex
H	Hastelloy C4 (2.4610)
Y	Incoloy 800 (1.4876)
L	Inconel 600 (2.4816)
M	Monel 400 (2.4360)

Continued next page

Code	Description
11. Isolation Valve for Sensor Profile	
	See page no. 140
12. Flanged Packing Gland	
S	316Ti (1.4571)
X	A 182 F51 (1.4462) / Duplex
K	904L (1.4539)
H	Hastelloy C4 (2.4610)
Y	Incoloy 800 (1.4876)
L	Inconel 600 (2.4816)
M	Monel 400 (2.4360)
13. Cage Nipple Material	
PC	C.S. – standard –
PS	316Ti (1.4571)
PX	A 182 F51 (1.4462) / Duplex
P3	904L (1.4539)
PH	Hastelloy C4 (2.4610)
PY	Incoloy 800 (1.4876)
PL	Inconel 600 (2.4816)
PM	Monel 400 (2.4360)
14. Packing Material	
1	PTFE, up to 392 °F (200 °C)
2	Graphite up to 752 °F (400 °C)
15. Gear Box	
0	without gear box
1	with gear box, mat. die-cast aluminium
2	with gear box, mat. stainless steel
16. Thermal Insulation	
KI	without
X..	with thermal insulation, please advise thickness in mm (or inches)
17. Piping Run at Place of Installation	
HL	horizontal
VL	vertical
18. Integrated PT-100 RTD	
T0	without
TA	3-wire
TB	3-wire, with Ex-approval
19. Head Transmitter for RTD	
	See page no. 45
20. Process connection	
	See page no. 142
21. Instrument Valves	
	See page no. 143
22. Accessories	
	See page no. 143

Order key for FTH-65/66

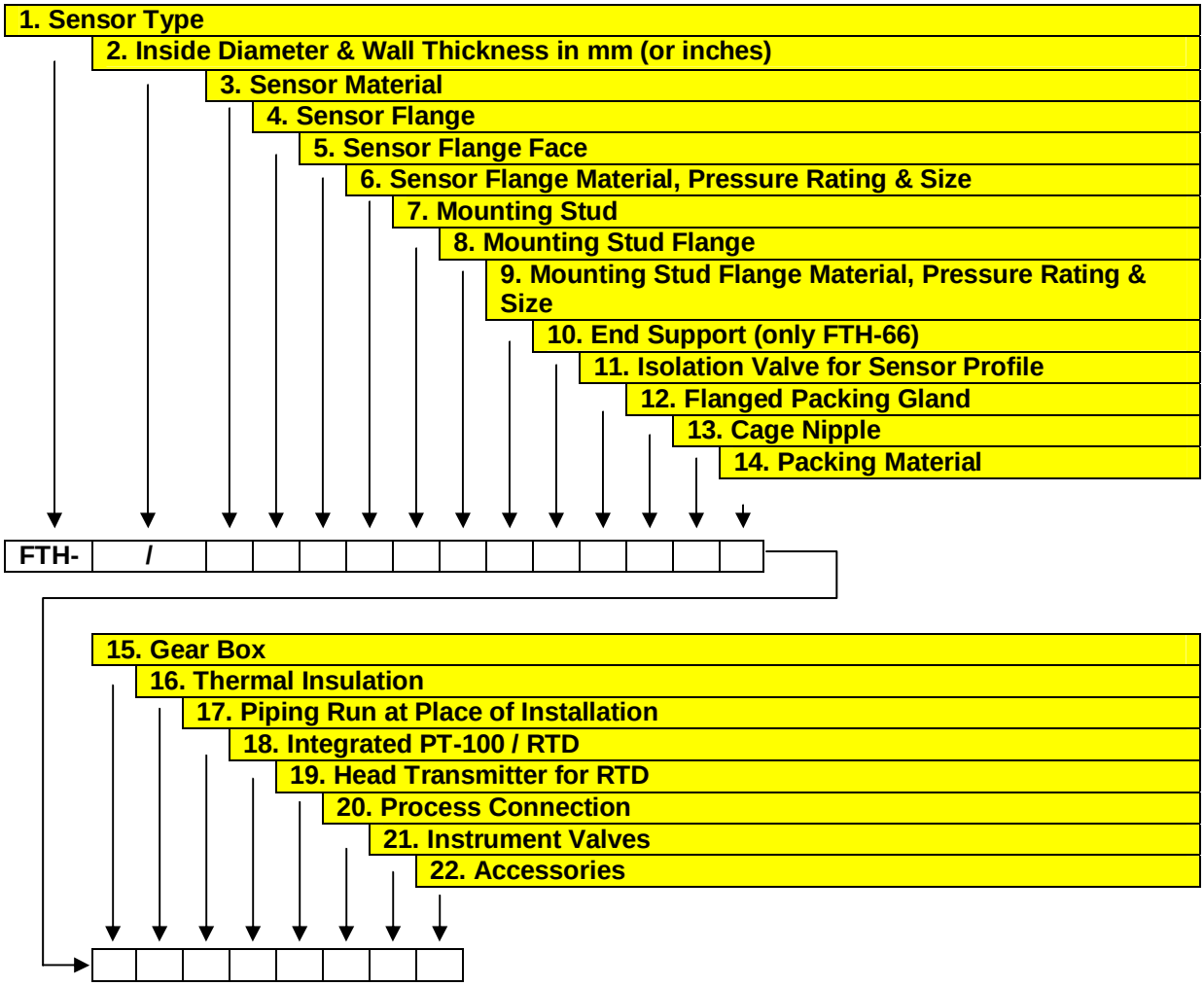

d4.1) Isolation Valve for the Sensor Profile, type FTH-65/66

Code	Description		
Isolation Valve for Sensor Profile, acc. to DIN			
	Type	**Size / Pressure rating**	**Material**
MF50	ball valve	DN 65 / PN 16	C.S
MF51	ball valve	DN 65 / PN 16	A182-F316H
MF52	ball valve	DN 65 / PN 16	A182 F51 “Duplex”
MF53	ball valve	DN 65 / PN 16	Monel 400
MF54	ball valve	DN 65 / PN 16	Hastelloy C4
MF55	ball valve	DN 65 / PN 40	C.S
MF56	ball valve	DN 65 / PN 40	A182-F316H
MF57	ball valve	DN 65 / PN 40	A182 F51 “Duplex”
MF58	ball valve	DN 65 / PN 40	Monel 400
MF59	ball valve	DN 65 / PN 40	Hastelloy C4
MF67	ball valve	DN 65 / PN 40	Incoloy 800
MF68	ball valve	DN 65 / PN 40	Inconel 600
MF60	ball valve	DN 65 / PN 63	C.S
MF61	ball valve	DN 65 / PN 63	A182-F316H
MF62	ball valve	DN 65 / PN 63	A182 F51 “Duplex”
MF63	ball valve	DN 65 / PN 63	Monel 400
MF64	ball valve	DN 65 / PN 63	Hastelloy C4
MF65	ball valve	DN 65 / PN 63	Incoloy 800
MF66	ball valve	DN 65 / PN 63	Inconel 600
MS30	gate valve	DN 65 / PN 100	C.S
MS31	gate valve	DN 65 / PN 100	A182-F316H

Code	Description		
Isolation Valve for Sensor Profile, acc. to DIN			
	Type	**Size / Pressure rating**	**Material**
AF30	ball valve	2 ½” 150 lbs	C.S
AF31	ball valve	2 ½” 150 lbs	A182-F316H
AF32	ball valve	2 ½” 150 lbs	A182 F51 “Duplex”
AF33	ball valve	2 ½” 150 lbs	Monel 400
AF34	ball valve	2 ½” 150 lbs	Hastelloy C4
AF35	ball valve	2 ½” 300 lbs	C.S
AF36	ball valve	2 ½” 300 lbs	A182-F316H
AF37	ball valve	2 ½” 300 lbs	A182 F51 “Duplex”
AF38	ball valve	2 ½” 300 lbs	Monel 400
AF39	ball valve	2 ½” 300 lbs	Hastelloy C4
AF40	ball valve	2 ½” 300 lbs	Incoloy 800
AF41	ball valve	2 ½” 300 lbs	Inconel 600
AS30	gate valve	2 ½” 600 lbs	C.S
AS31	gate valve	2 ½” 600 lbs	A182-F316H

e) Ordering Codes for Instrument Connection and Shut-off Device for Itabar-Flow-Sensors type FTH

Code	Description
Instrument Connection	
A04	Sensor head with ¼" NPT-M
A03	Sensor head with ½" NPT-M
A06	Flange plate for direct mounting of a 3-way-manifold, material 316Ti
A07	Flange plate for direct mounting of a 3-way-manifold, material Duplex (1.4462)
A08	Flange plate for direct mounting of a 3-way-manifold, material 904L (1.4539)
A09	Flange plate for direct mounting of a 3-way-manifold, material Hastelloy C4
A10	Flange plate for direct mounting of a 3-way-manifold, material Inconel 600
A11	Flange plate for direct mounting of a 3-way-manifold, material Monel 400
A14	Flange plate for direct mounting of a 3-way-manifold, material Incoloy 800
A15	Flange plate for direct mounting of a 5-way-manifold, material 316Ti
A16	Flange plate for direct mounting of a 5-way-manifold, material Duplex (1.4462)
A17	Flange plate for direct mounting of a 5-way-manifold, material 904L (1.4539)
A18	Flange plate for direct mounting of a 5-way-manifold, material Hastelloy C4
A19	Flange plate for direct mounting of a 5-way-manifold, material Inconel 600
A20	Flange plate for direct mounting of a 5-way-manifold, material Monel 400
A23	Flange plate for direct mounting of a 5-way-manifold, material Incoloy 800
Shut-off Devices for Impulse Lines	
A00	without
A55	ball valve PN 40; case C.S. / ½" NPT-F, packing: PTFE
A56	ball valve PN 40; case A182-F316H (1.4401) / ½" NPT-F, packing: PTFE
A57	ball valve PN 40; case C.S. / ¼" NPT-F, packing: PTFE
A58	ball valve PN 40; case A182-F316H (1.4401) / ¼" NPT-F, packing: PTFE
A59	shut-off valve PN 400, case C.S., ¼" NPT-F, packing: graphite
A60	shut-off valve PN 400, case A182-F316H (1.4401), ¼" NPT-F, packing: graphite
A61	shut-off valve PN 400, case C.S., ½" NPT-F, packing: graphite
A62	shut-off valve PN 400, case A182-F316H (1.4401), ½" NPT-F, packing: graphite
A90	shut-off valve ½"NPT, 800 lbs, case C.S., ½" NPT-F, packing: graphite
A91	shut-off valve ½"NPT, 800 lbs, case A182-F316H (1.4401), ½" NPT-F, packing: graphite
A63	shut-off valve ½" NPT, PN10, PTFE
A64	shut-off valve G ½", PN10, PVDF
A66	direct mounted, with 3-way-manifold, PN400, case A182-F316L/316L (1.4404) packing: PTFE (only with A06…A14)
A67	direct mounted, with 3-way-manifold, PN10, case PTFE, packing: PTFE (only with A06…A14)
A71	direct mounted, with 5-way-manifold, PN400, case A182-F316L/316L (1.4404) packing: PTFE (only with A15…A23)
Accessories	
E12	1 pair of screw joints ½" NPT-M / ∅ **12 mm**, 316SS (1.4571)
E14	1 pair of screw joints ½" NPT-M / ∅ **14 mm**, 316SS (1.4571)

C Itabar-Flow-Sensors for Steam

C.1 General Information

C.1.1 Selection Criteria

The tables in this section offer an overview of DP sensors used in steam flow measurement, their design elements and the various installation options.

The following tables allow the material selection for all important components, depending on operating pressures and temperatures. The operating limits mentioned are determined by the assembly parts, (e.g. threaded weld-o-lets and assembly flanges). For a particular process condition other components – such as sensor profile, condensate pots and shut-off valves - can be selected with the help of pressure- and temperature tables.

Condensate pots are required for steam flow measurement so that a constant transition from steam to condensate and vice versa is assured. Furthermore the water buffer inside the condensate pots serves as temperature protection for the connected DP transmitter. If not otherwise specified by the customer the condensate pots are supplied welded to the shut-off valves.

In cases where a double shut-off assembly with two shut-off valves is needed the order code is to be expanded accordingly.

The following selection process for steam flow sensors is recommended:

C.1.2 Selection of the Proper Sensor Type

1.) Material selection of sensor types and their assembly parts; the material has to fit the pipe material in order for the welding to be compatible.
2.) Pressure rating selection of assembly parts; must be able to handle the operating pressure and temperature of the steam.
3.) If applicable: Selection of wet-tap or non-wet-tap option and model
4.) If applicable: Selection of mechanical connecting parts between assembly portion of the sensor and the pipe.
The WINFLOW sizing program helps the customer to select the correct sensor type depending on the maximum flow volume and the pipe size.

C.1.3 Selection of Options

The selection of the various options is done in the sequence suggested by the sensor's „Order Code Information". It is important to note that the materials of the sensor (sensor profile, condensate pots, valves) not necessarily have to be identical with the material of the assembly parts The following options are available :

1.) Selection of the sensor material: the material of the sensor profile must meet the application's operating pressure and temperature requirements
2.) Selection of the condensate pots: the material and version of the condensate pots must meet the application's operating pressure and temperature requirements.
Selection of the valves for the pressure connections appropriate for the steam's operating pressure and temperature.

C.1.4 Steam Sensor Overview

IBRD	IBFD	FTMD	FTHD
IBFD-HT	**IBFD-HTG**		

Features:	IBRD	IBFD	IBFD-HT	IBFD-HTG	FTMD	FTHD
Installation / Removal:						
Installation under pressure possible	---	---	---	---	x	x
Pipe to be emptied for installation	x	x	x	x	---	---
Material of mounting assembly parts (in order to weld it should be same as pipe material)						
C-steel	x	x	---	---	x	x
(1.4571) st steel	---	---	---	---	x	x
15 Mo 3, 13 CrMo 4 4, 10 CrMo 9 10, 10 CrMoVNb 91	---	x	x	x	---	---
Sensor material (to be selected for specific operating conditions)						
St steel (1.4571) (to max 887 °F, IBRD max. 392°F)	x	x	---	---	x	x
1.5415, 15 Mo 3 (to max. 986 °F)	---	---	x	x	---	---
1.7335, 13 CrMo 4 4 (to max. 1022 °F)	---	---	x	x	---	---
1.7380, 10 CrMo 9 10 (to max. 1058 °F)	---	---	x	x	---	---
1.4903, 10 CrMoVNb 91 (to max. 1202 °F)	---	---	x	x	---	---
Type of mounting assembly:						
Threaded weld-o-let (to max. 392 °F)	x	---	---	---	---	---
Welding boss (to max. 392 °F)	---	---	---	---	x	---
Flanged weld assembly	---	x	x	---	---	x
Weld assembly w/out flange	---	---	---	x	---	---
Further design features:						
Single-piece welded construction	---	---	---	x		
Threaded shut-off valves for sensor profile	---	---	---	---	x	---
Flanged shut-off valves for sensor profile	---	---	---	---	---	x
Screw-rods for easy removal	---	---	---	---	x	x
Option: wheel for removal	---	---	---	---	x	x

C.1.5 Installation Position (Flow sensors for steam)

Steam, the sensor is always to be inserted from the side into a pipe, the transition between the aggregate conditions steam and water must be allowed to take place freely, the transmitter is to be installed below the pressure process connections. The water columns of the condensate pots must be located above the transmitter at exactly the same hydrostatic level.

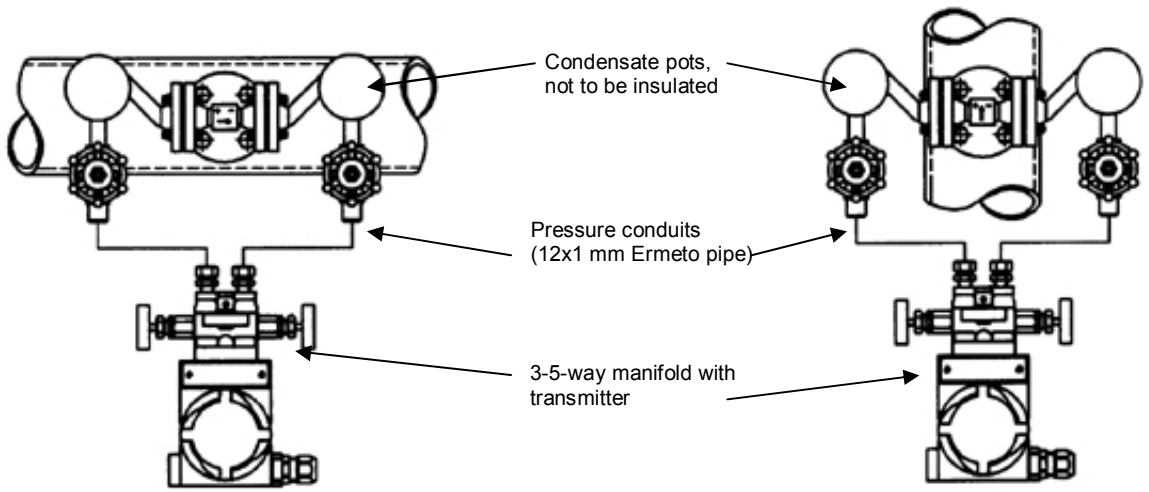

Fig 52 Recommended sensor orientation for steam measurement

Important: When measuring steam never insert the sensor from the top into a pipe !

C.2 Itabar-Flow-Sensors for Steam Measurement (fixed installation)

C.2.1 Itabar®-Flow-Sensors with Threaded Process Connection Types: IBRD-15/20/21/25/26/35/36 (up to 235 psi and 392 °F)

a.) Description

The ITABAR steam sensors series IBRD are designed to measure steam up to 235.2 PSI (16 bar) and 392°F (200°C). The standard sensor material is 316 st steel (1.4571). The installation is normally done with threaded weld-o-lets. For safety reasons it is important to ensure the tightness of the threaded connection. Tightening of the threaded nut should be done with a wrench.

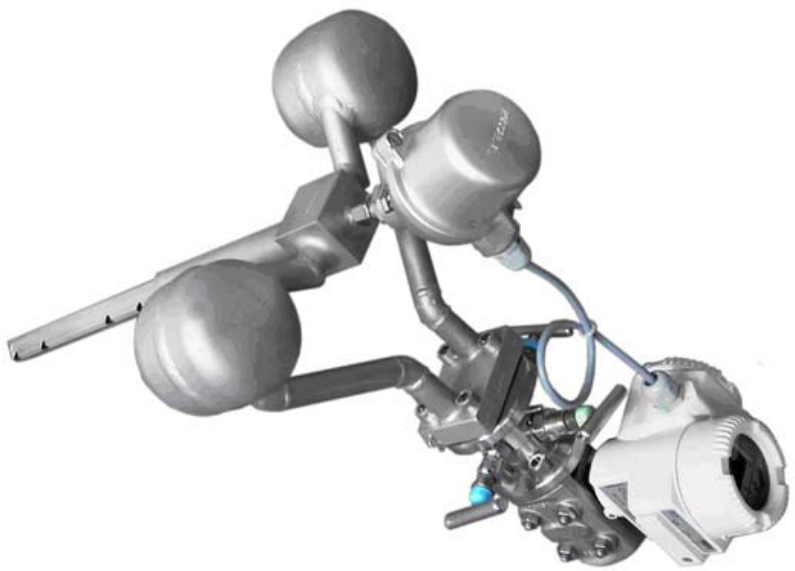

Fig 53: Compact version of a flow sensor used to measure steam mass flow. The components: Itabar-Flow-Sensor with welded condensate pots, wet-tap temperature sensor, flange plate with 3-way-manifold and Δp-transmitter to measure the differential pressure, the operating pressure and the operating temperature, and to calculate mass flow.

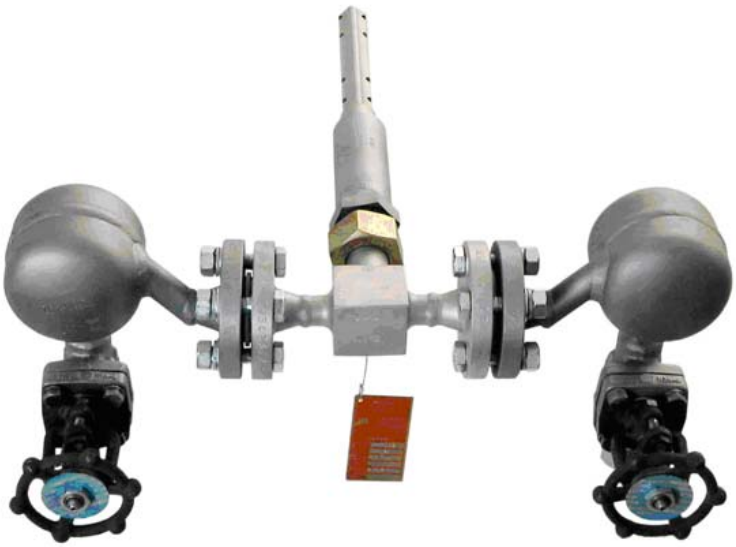

Fig 54: Itabar-Flow-Sensor to measure volumetric steam flow. The components: Threaded weld-o-let sensor head with flanges, condensate pots and screwed-on ANSI–slide valve 800 lbs.

b) Drawing for IBRD

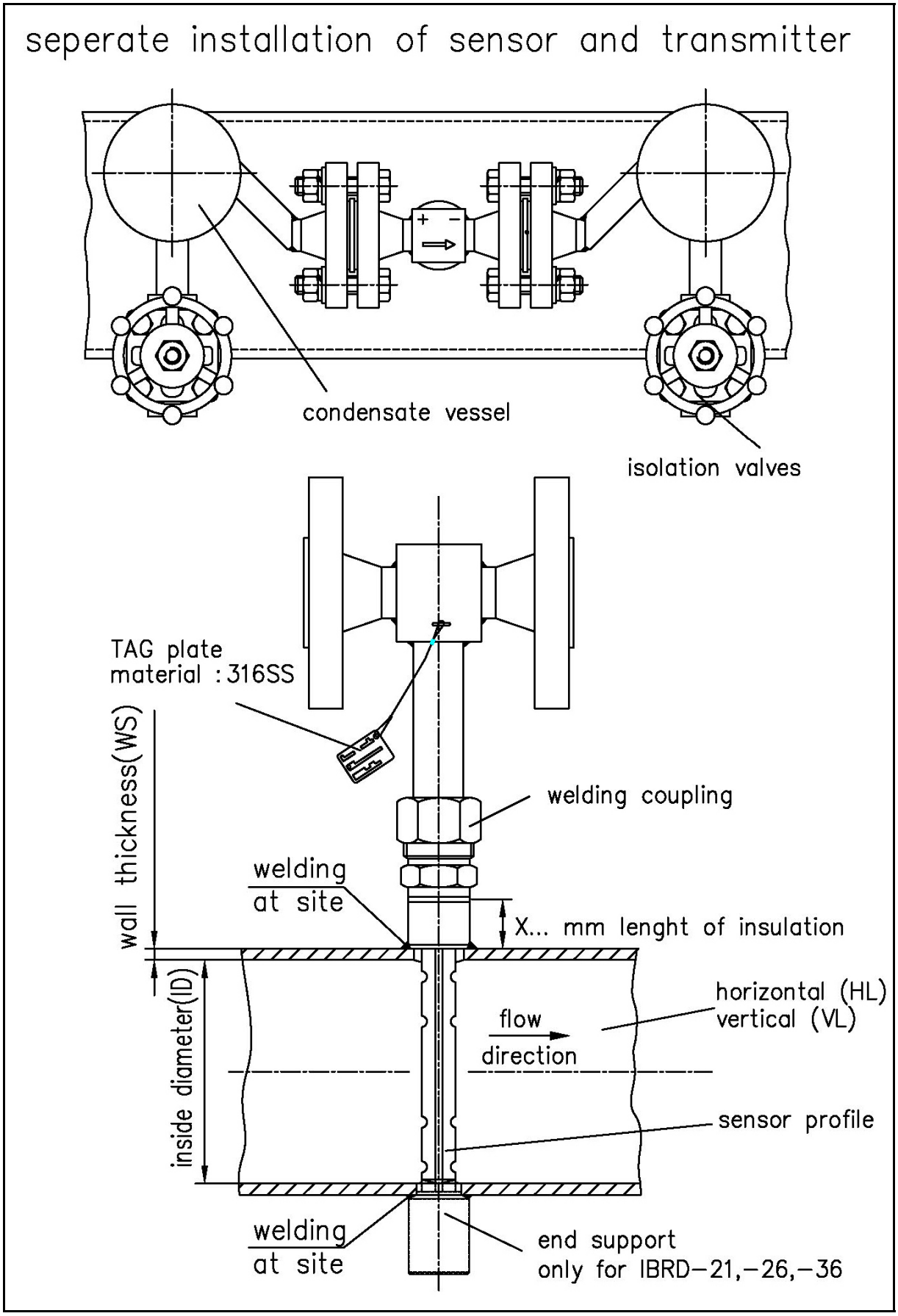

c.) Order Data for Itabar® Series IBRD-20/21/25/26/35/36

c.1) Sensor type:

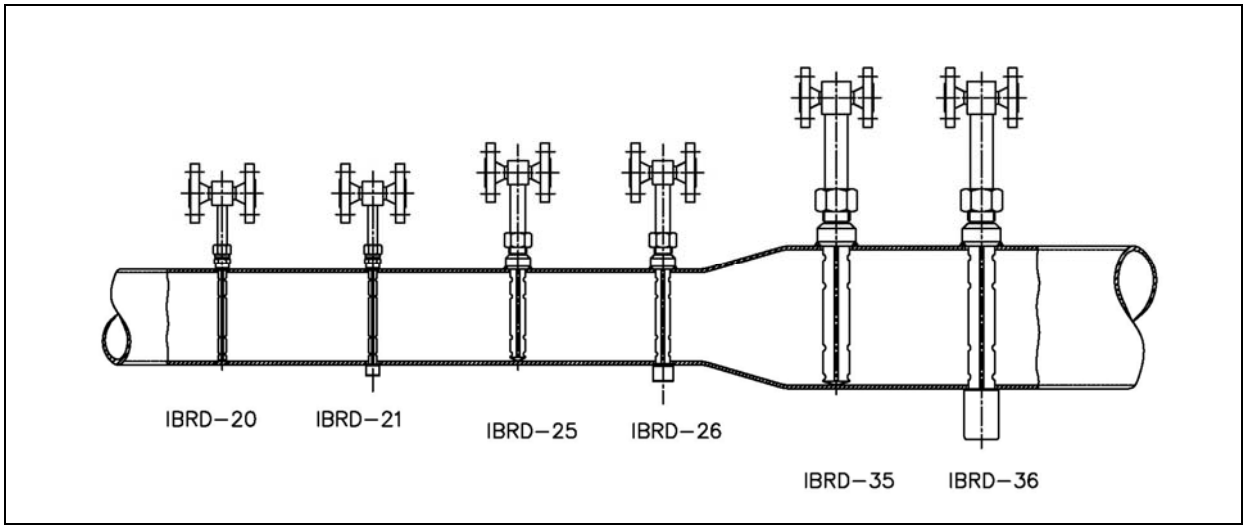

Pipe Size inches	mm	Maximum Flow Volume m³/h Sensor Type					
		IBRD -20	IBRD -21	IBRD -25	IBRD -26	IBRD -35	IBRD -36
1 ½	DN 40	52	123	---	---	---	---
2	DN 50	75	175	---	---	---	---
2 ¼	DN 65	114	264	---	---	---	---
2 ½	DN 80	156	355	---	---	---	---
4	DN 100	210	476	256	594	---	---
5	DN 125			341	784	---	---
6	DN 150	---	---	426	973	---	---
8	DN 200	---	---	595	1345	---	---
10	DN 250	---	---	776	1747	---	---
12	DN 300	---	---	970	2178	2004	4501
14	DN 350	---	---	1155	2592	2408	5399
16	DN 400	---	---	1335	2990	2813	6300
20	DN 500	---	---	1707	3820	3584	8018
24	DN 600	---	---	2069	4629	4369	9770
28	DN 700	---	---	2441	5461	5180	11580
32	DN 800	---	---	2835	6336	6009	13432

These values are for water of ρ = 0,9982 kg/l SGU and at a temperature T = 20 °C. To calculate volumetric or mass flow of fluids with other densities see chapter 6 „Specifications of DP Sensors with WINFLOW“.

Selection and Specification of a Steam Flow Sensor
P-max. 235,2 psi, T-max. 392°F

To Be Decided By Customer Before Sensor Selection

1. Remote mounting of DP transmitter – separate from the sensor (connections via Ermeto coupling, or compact version (DP transmitter integral with sensor)

2. Sensor to be equipped with integral PT100 temperature sensor

Existing Process Data

Pipe size (ID) and pipe wall thickness, pipe material
Pipe configuration at sensor location; insulation of pipe (thickness)
Flow volume
Process pressure (abs.)
Process temperature

Example:

1. Pipe ID: 13,64 inches, wall thickness: 0,18 inches
2. Pipe material : C.S. (St 35.8)
3. Insulation: 3,94 inches
4. Pipe configuration: horizontal
5. Flow max. 35000 kg/h (saturated steam)
6. Pressure: 6 bar A (88,2 PSI/ abs.)
7. Temperature 158,85°C (317.93°F)
8. Selected option : integrated PT-100 temperature sensor

The sensor type IBRD-25 or IBRD-26 are selected via the pipe diameter in the table on page 117,. The Winflow program supplies information about the sensor type.

The above mentioned Winflow calculation will determine sensor type IBRD-25. The differential pressure according to process data entered is 40,3 mbar.

Sensor type IBRD-25 can be used up to a max. flow of (lb/hr) 57310 kg/h. Should the flow volume be higher than allowed for the selected sensor the WINFLOW program will issue a message: “Please select another sensor type“. The customer can then for example select a sensor type IBRD-26 (w/end support).

Order code example:

IBRD-25-ID346,6/4,5mm-S-1-0-K1-C-X100-HL-TA-A81

INTRA-AUTOMATION GmbH

D-41515 Grevenbroich * Otto-Hahn-Str. 20 * Tel: +49 2181-68761 * Fax: +49 2181-64492

WINFLOW 2.75 (I) Diff. Pressure Calculation
ITABAR - Flow - Sensor

Company:	Mustermann
Name(capital letters):	
Street:	
Zip Code/City:	
Offer-/Com. No:	
P. Order Number:	
Tag No.:	
Serial No.:	
Pipe Data:	ID= 346,600/4,500 mm - horizontal
Date:	18.04.2002
Person in charge	U.P.
Calculation:	Mass rate Gas & steam
Fluid:	Saturated steam

Pipe Internal Dimensions	346,600	mm
Flowing Temperature:	158,850	°C
Flowing Pressure:	6,000	bar A
Density:	3,167	kg/m3
Viscosity:	0,0140	cPs
K-Factor:	0,6345	without unit

Base Temperature	**273,15 Kelvin**
Base Pressure	**101,30 kPa**

	QMax	QNorm	QMin	
Flow Rate	35.000,00	28.000,00	7.000,00	kg/H
Reynolds No.	2.550.490	2.040.392	510.098	without unit
Permanent press. loss	3,290	2,100	0,130	mbar
Expansionsfactor	0,999	0,999	1,000	without unit
Velocity:	32,53	26,03	6,51	m/sec.
Differential Pressure	**40,381**	**25,828**	**1,613**	**mbar**

Itabar-Type: IBRD-25-346,6/4,5mm-S-1-0-K1-C-X100-HL-TA-A81
Material Sensor:
Note:

Max. DeltaP	112,70 mbar	Max. Flow Rate	58.521,05 kg/H
Natural Freq.:	145,24 hz	Operat. Freq.:	101,44 hz

d) Order Specification for Itabar-Flow-Sensors type IBRD

d.1) IBRD-20/21

1. Type of Sensor	
IBRD-20	without end support
IBRD-21	with end support
2. Inside Diameter and Wall Thickness	
ID/WT	Inside diameter and wall thickness in mm (or inches), please specify
3. Sensor Material	
S	316Ti (1.4571)
4. Welding Coupling	
0	without
1	CS
2	316Ti (1.4571)
5. Material End Support (only IBRD-21)	
0	without end support
C	CS
S	316Ti (1.4571)
6. Instrument Connection and Condensate Vessels	
	Please see page 153
7. Insulation	
KI	without
X..	Insulation in mm (or inches), please specify
8. Pipe run at place of installation	
HL	Horizontal
VL	Vertical
9. Instrument Valves	
	Please see page 153

Order key IBRD-20/21

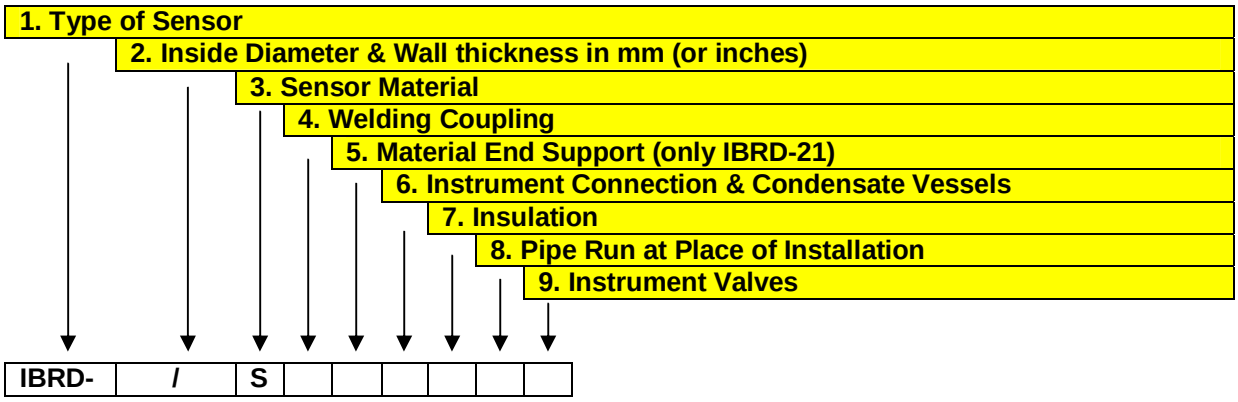

d.2) IBRD-25/26

1. Type of Sensor	
IBRD-25	without end support
IBRD-26	with end support
2. Inside Diameter and Wall Thickness	
ID/WT	Inside diameter and wall thickness in mm (or inches), please specify
3. Sensor Material	
S	316Ti (1.4571)
4. Welding Coupling	
0	without
1	CS
2	316Ti (1.4571)
5. Material End Support (only IBRD-26)	
0	without end support
C	CS
S	316Ti (1.4571)
6. Instrument Connection and Condensate Vessels	
	Please see page 153
7. Insulation	
KI	without
X..	Insulation in mm (or inches), please specify
8. Pipe run at place of installation	
HL	Horizontal
VL	Vertical (only for dry gases
9. PT-100-Sensor (RTD)	
T0	Without
TA	3-wire
TB	2-wire, with Ex-approval
10. Head transmitter for RTD	
	Please see page 45
11. Instrument Valves	
	Please see page 153

Order key IBRD-25/26

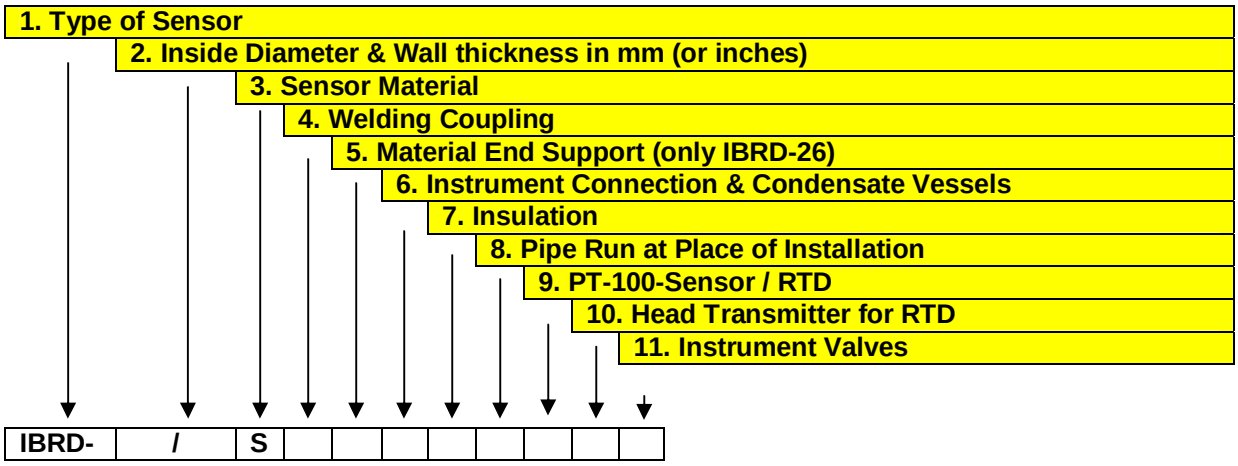

d.3) IBRD-35/36

1. Type of Sensor	
IBRD-35	without end support
IBRD-36	with end support
2. Inside Diameter and Wall Thickness	
ID/WT	Inside diameter and wall thickness in mm (or inches), please specify
3. Sensor Material	
S	316Ti (1.4571)
4. Welding Coupling	
0	without
1	CS
2	316Ti (1.4571)
5. Material End Support (only IBRD-36)	
0	without end support
C	CS
S	316Ti (1.4571)
6. Instrument Connection and Condensate Vessels	
	Please see page 153
7. Insulation	
KI	without
X..	Insulation in mm (or inches), please specify
8. Pipe run at place of installation	
HL	Horizontal
VL	Vertical (only for dry gases
9. PT-100-Sensor (RTD)	
T0	without
TA	3-wire
TB	2-wire, with Ex-approval
10. Head transmitter for RTD	
	See page no. 45
11. Instrument Valves	
	Please see page 153

Order key IBRD-35/36

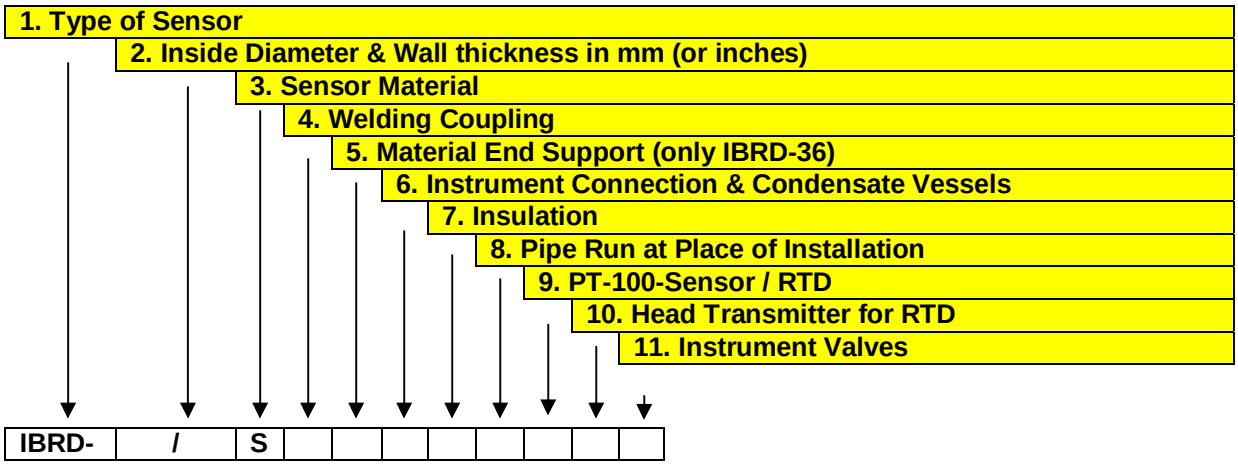

e) Order Specification for Condensate Vessels, Instrument Connection and Shut-Off-Valves for Itabar-Flow-Sensors type IBRD

Flanged Joint at Sensor Head (1 pair)		
K0	without condensate vessels	
K1	condensate vessel, weld sockets 21,3 mm, edge form 21 acc. DIN 2559	
K3	condensate vessel with R ½" screw neck for screwed flange acc. DIN 19207	
K4	condensate vessel with ½"NPT screw neck	
K5	condensate vessel with Ermeto-coupling for 12 mm pipe (DIN 2353)	
Material and Size for Condensate Vessels		
	Material	**Size**
H	A 285 (P 265 GH) "heavy boiler plate HII"	∅ 88,9 x 5 mm
S	316Ti (1.4571)	∅ 88,9 x 5 mm
K	316L	∅ 88,9 x 5 mm

Shut-off-Device for Impulse Pipe, standard with welded condensate vessel (1 pair)				
	Type	**Nominal Pressure**	**Connection**	**Material**
A00	without shut-off-device			
A81	ANSI gate valve	800 lbs	½" NPT	Housing: A105 (C22) Packing graphite-fiber-glass
A82	ANSI gate valve	800 lbs	½"NPT	Housing: 316L (1.4404) Packing graphite-fiber-glass

Only for compact version:

Flanged Joint at Sensor Head (1 pair)		
A1	condensate vessel with sensor head, impulse pipe and mounting flange directly welded	
Material and Size of Condensate Vessel		
	Material	**Size**
H	A 285 (P 265 GH) "heavy boiler plate HII"	∅ 88,9 x 5 mm
S	316Ti (1.4571)	∅ 88,9 x 5 mm

Connection (only in combination with A1)	
A06	flange plate for 3-way-manifold, material: 316Ti (1.4571)
A15	flange plate for 3-way-manifold, material: 316Ti (1.4571)

Shut-off-Device for Impulse Pipe (only in combination with A1				
	Type	Nominal Pressure	Material	Packing
A00	without shut-off-device			
A66	3-way manifold	PN 400	A182-F316L (1.4401)	Graphite
A71	5-way-manifold	PN 400	A182-F316L (1.4401)	Graphite

e1) Picture of Condensate Pots

Material	Wall thickness [mm]	Medium temperature (°F / °C)					
		572 / 300	662 / 350	752 / 400	842 / 450	932 / 500	1022 / 550
		Max. operation pressure (psi / bar)					
HII	5,0	1321 / 91,1	1221 / 84,2	1128 / 77,8	1083 / 74,7	-/-	-/-
316 Ti	5,0	1336 / 92,1	1289 / 88,9	1242 / 85,7	1206 / 83,2	1187 / 81,9	1169 / 80,6
316 L	5,0	1321 / 91,1	1221 / 84,2	1128 / 77,8	1083 / 74,7	-/-	-/-
15Mo3	5,0	1580 / 109,0	1488 /102,6	1396 / 96,3	1350 / 93,1	1303 / 89,9	1242 / 85,7

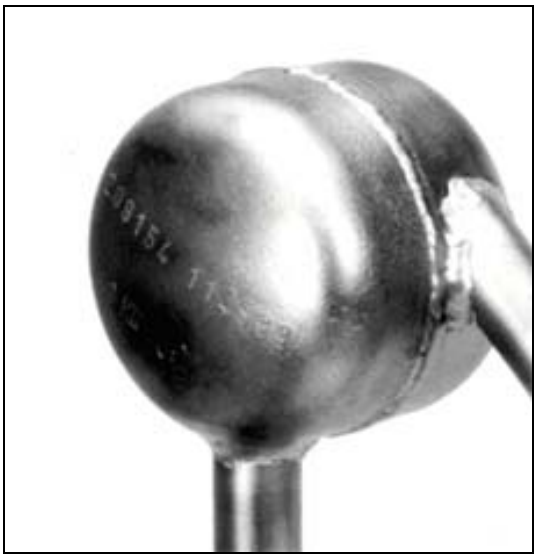

Fig 55: condensate pot, ∅ 88,9 x 3,2 mm

e2) Pressure-Temperature Tables for Shut-Off Valves

Code	Max. operation pressure at temperature													
	32	212	302	392	482	572	662	752	797	842	887	932	1022	**°F**
	0	100	150	200	250	300	350	400	425	450	475	500	510	**°C**
A81	1987	1929	1885	1841	1775	1581	1362	1160	1001	827	624	-	-	**psi**
	137	133	130	127	121	109	96	80	69	57	43	-	-	**bar**
A82	2002	1929	1885	1841	1755	1581	1407	1291	1233	1189	1088	972	855	**psi**
	138	133	130	127	121	109	97	89	85	82	75	-	-	**bar**

Fig: 56 construction of small gate valve (A09)

C.2.2 Itabar®-Flow-Sensors with Flanged Process Connection Types: IBFD-15/20/21/25/26/35/36 (up to 1450 psi and 842 °F)

a.) Description

The ITABAR-sensor series IBFD is designed to measure the flow of saturated and superheated steam The installation assembly includes a flanged connection and thus allows the sensor to be used in high pressure applications (to 1450psi [100 bar]). The maximum possible temperature is 842°F (450°C). The standard sensor material is 316 st steel (1.4571)

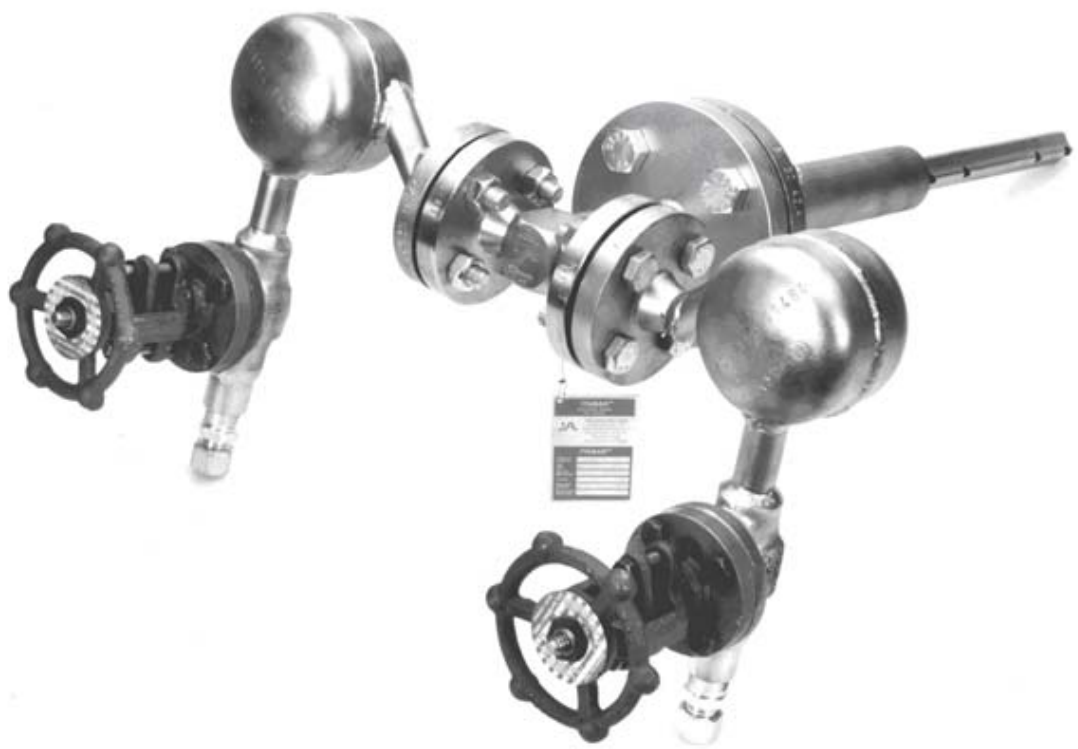

Fig 57: Itabar IBFD with flanged condensate pots to measure superheated steam.

b) Drawing for IBFD

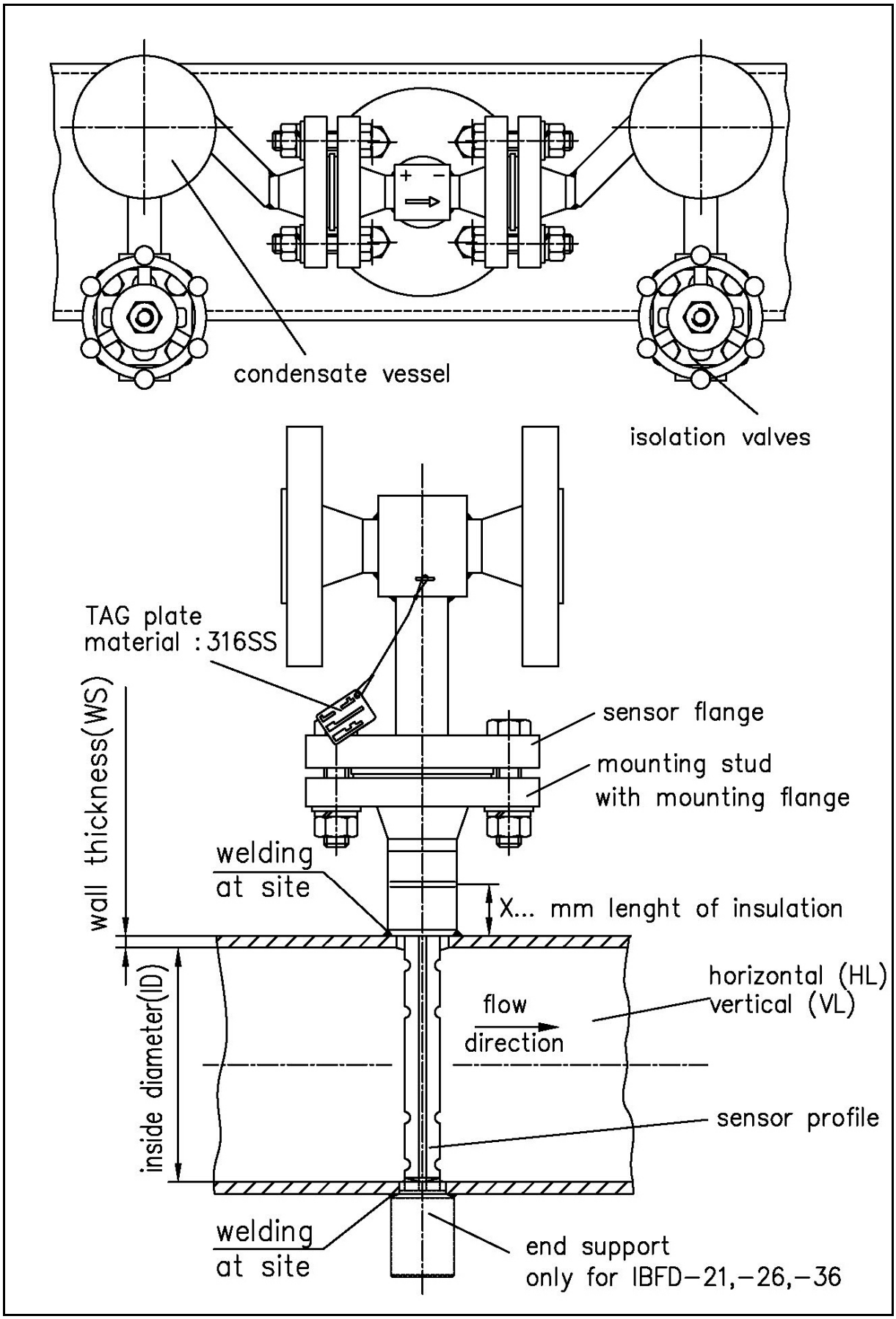

c.) Order Data for Itabar® Series IBFD-20/21/25/26/35/36

c.1) Sensor type:

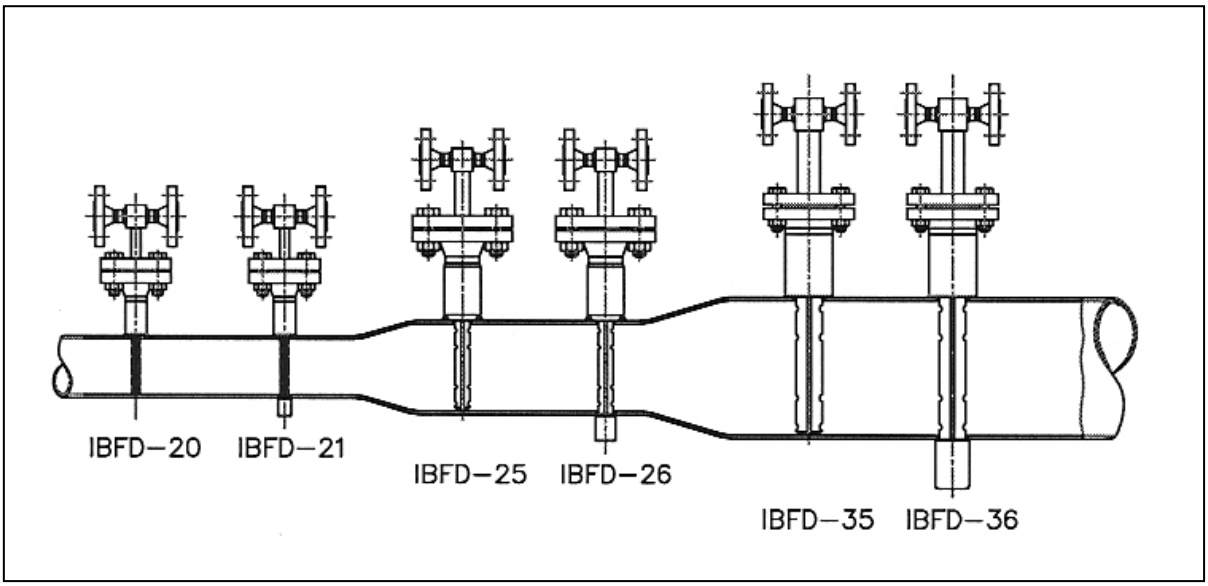

Pipe ID inches	mm	Maximum Flow Volume m³/h					
		IBFD - 20	IBFD - 21	IBFD - 25	IBFD - 26	IBFD - 35	IBFD - 36
1 ½	DN 40	29	114	---	---	---	---
2	DN 50	59	161	---	---	---	---
2 ¼	DN 65	95	243	---	---	---	---
2 ½	DN 80	130	328	---	---	---	---
4	DN 100	179	439	205	544	---	---
5	DN 125	238	570	281	719	---	---
6	DN 150	---	---	358	894	---	---
8	DN 200	---	---	61	1242	---	---
10	DN 250	---	---	687	1623	---	---
12	DN 300	---	---	872	2034	1757	4204
14	DN 350	---	---	1053	2433	2142	5067
16	DN 400	---	---	1226	2818	2532	5942
20	DN 500	---	---	1592	3627	3283	7611
24	DN 600	---	---	1949	4420	4052	9327
28	DN 700	---	---	2318	5237	4846	11106
32	DN 800	---	---	2701	6099	7937	12930
36	DN 900	---	---	---	7000	---	14790
40	DN 1000	---	---	---	7921	---	16674

These values are for water of ρ = 0,9982 kg/l SGU and at a temperature T = 20 °C. To calculate volumetric or mass flow of fluids with other densities see chapter 6 „Specifications of DP Sensors with WINFLOW“.

d.) Order Specification Itabar-Flow-Sensors, Series IBFD

d.1) IBFD-20/21

1. Type of Sensor		
IBFD-20	without end support	
IBFD-21	with end support	
2. Inside Diameter and Wall Thickness		
ID/WT	Inside diameter and wall thickness in mm (or inches), please specify	
3. Sensor Material		
S	316Ti (1.4571)	
4. Sensor Flange (always identically to sensor material)		
SM	acc. DIN	
SA	acc. ANSI	
5. Flange Face		
1	acc. DIN	
2	ANSI RF	
3	ANSI RF SF (smooth finish)	
4	RTJ	
6. Pressure rating (PN/lbs) and nominal Size (DN / “) of Sensor Flange		
	Pressure rating	**Nominal Size**
A01	PN 16 / 150 lbs	DN25 / 1”
A02	PN 40	DN25 / 1”
A03	PN63 / 300 lbs	DN25 / 1”
A04	PN 100 / 600 lbs	DN25 / 1”
A05	PN 160	DN25 / 1”
A06	PN 250 / 1500 lbs	DN25 / 1”
A07	PN 320	DN25 / 1”
A08	PN 400 / 2500 lbs	DN25 / 1”
7. Mounting Stud (material of stud has to be identical / resp. weldable to the pipe material)		
0	without	
R	mounting stud with flange (standard)	
W	weldolet-stud with flange	
8. Mounting Stud Flange (size and pressure rating has to be identical to sensor flange)		
0	without	
M	acc. DIN, form C	
A	acc. ANSI, RF	
F	acc. ANSI, SF (smooth finish)	
T	acc. ANSI, RTJ	
9. Mounting Stud material, with flange, (max pressure rating)		
0	without	

	Material	**Pressure rating**	**Size**
C1	C.S.	PN 16 / 150 lbs	DN 25 / 1”
S1	316Ti	PN 16 / 150 lbs	DN 25 / 1”
P1	A335 Grade P1	PN 16 / 150 lbs	DN 25 / 1”
R1	A335 Grade P11	PN 16 / 150 lbs	DN 25 / 1”
V1	A335 Grade P22	PN 16 / 150 lbs	DN 25 / 1”
Q1	A335 Grade P91	PN 16 / 150 lbs	DN 25 / 1”

C2	C.S.	PN 40	DN 25 / 1”
S2	316Ti	PN 40	DN 25 / 1”
P2	A335 Grade P1	PN 40	DN 25 / 1”
R2	A335 Grade P11	PN 40	DN 25 / 1”
V2	A335 Grade P22	PN 40	DN 25 / 1”
Q2	A335 Grade P91	PN 40	DN 25 / 1”

C3	C.S.	PN 63 / 300 lbs	DN 25 / 1”
S3	316Ti	PN 63 / 300 lbs	DN 25 / 1”
P3	A335 Grade P1	PN 63 / 300 lbs	DN 25 / 1”
R3	A335 Grade P11	PN 63 / 300 lbs	DN 25 / 1”
V3	A335 Grade P22	PN 63 / 300 lbs	DN 25 / 1”
Q3	A335 Grade P91	PN 63 / 300 lbs	DN 25 / 1”

Continued next page

9. Mounting Stud material, with flange, (max pressure rating) (Continuation)			
	Material	**Pressure rating**	**Size**
C4	C.S.	PN 100 / 600 lbs	DN 25 / 1”
S4	316Ti	PN 100 / 600 lbs	DN 25 / 1”
P4	A335 Grade P1	PN 100 / 600 lbs	DN 25 / 1”
R4	A335 Grade P11	PN 100 / 600 lbs	DN 25 / 1”
V4	A335 Grade P22	PN 100 / 600 lbs	DN 25 / 1”
Q4	A335 Grade P91	PN 100 / 600 lbs	DN 25 / 1”
C5	C.S.	PN 160	DN 25 / 1”
S5	316Ti	PN 160	DN 25 / 1”
P5	A335 Grade P1	PN 160	DN 25 / 1”
R5	A335 Grade P11	PN 160	DN 25 / 1”
V5	A335 Grade P22	PN 160	DN 25 / 1”
Q5	A335 Grade P91	PN 160	DN 25 / 1”
C6	C.S.	PN 250 / 1500 lbs	DN 25 / 1”
S6	316Ti	PN 250 / 1500 lbs	DN 25 / 1”
P6	A335 Grade P1	PN 250 / 1500 lbs	DN 25 / 1”
R6	A335 Grade P11	PN 250 / 1500 lbs	DN 25 / 1”
V6	A335 Grade P22	PN 250 / 1500 lbs	DN 25 / 1”
Q6	A335 Grade P91	PN 250 / 1500 lbs	DN 25 / 1”
C7	C.S.	PN 320	DN 25 / 1”
S7	316Ti	PN 320	DN 25 / 1”
P7	A335 Grade P1	PN 320	DN 25 / 1”
R7	A335 Grade P11	PN 320	DN 25 / 1”
V7	A335 Grade P22	PN 320	DN 25 / 1”
Q7	A335 Grade P91	PN 320	DN 25 / 1”
C8	C.S.	PN 400 / 2500 lbs	DN 25 / 1”
S8	316Ti	PN 400 / 2500 lbs	DN 25 / 1”
P8	A335 Grade P1	PN 400 / 2500 lbs	DN 25 / 1”
R8	A335 Grade P11	PN 400 / 2500 lbs	DN 25 / 1”
V8	A335 Grade P22	PN 400 / 2500 lbs	DN 25 / 1”
Q8	A335 Grade P91	PN 400 / 2500 lbs	DN 25 / 1”

10. End Support (only IBFD-21)	
0	without end support
C	CS
S	316Ti (1.4571)
P	A335 Grade P1
R	A335 Grade P11
V	A335 Grade P22
Q	A335 Grade P91
11. Condensate Vessel with Connection	
	Please see page 107
12. Insulation	
KI	without
X..	Thickness of insulation in mm (Please advise!)
13. Pipe run at place of installation	
HL	horizontal
VL	vertical
14. Process connection (only for A1)	
	Please see page 169
15. Instrument valves	
	Please see page 169

Order key IBFD-20/21:

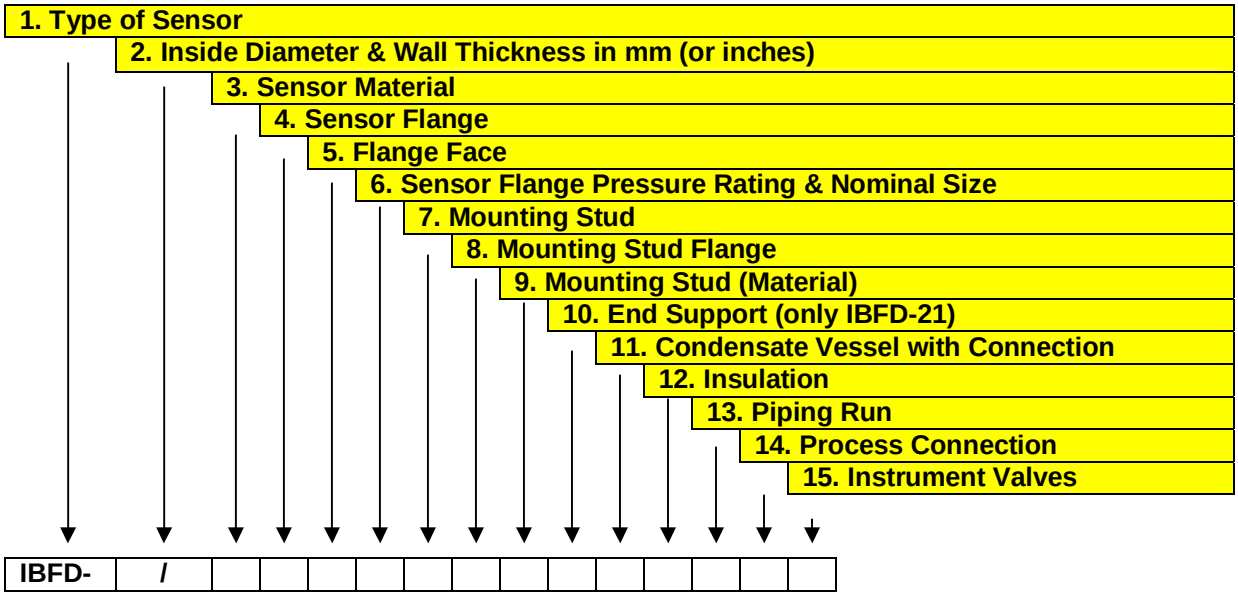

d.2) IBFD-25/26

1. Type of Sensor		
IBFD-25	without end support	
IBFD-26	with end support	
2. Inside Diameter and Wall Thickness		
ID/WT	Inside diameter and wall thickness in mm (or inches), please specify	
3. Sensor Material		
S	316Ti (1.4571)	
4. Sensor Flange (always identically to sensor material)		
SM	acc. DIN	
SA	acc. ANSI	
5. Flange Face		
1	acc. DIN	
2	ANSI RF	
3	ANSI RF SF (smooth finish)	
4	RTJ	
6. Pressure rating (PN/lbs) and nominal Size (DN / “) of Sensor Flange		
	Pressure rating	**Nominal Size**
B01	PN 16 / 150 lbs	DN32 / 1 ½”
B02	PN 40	DN32 / 1 ½”
B03	PN63 / 300 lbs	DN40 / 1 ½”
B04	PN 100 / 600 lbs	DN40 / 1 ½”
B05	PN 160	DN40 / 1 ½”
B06	PN 250 / 1500 lbs	DN40 / 1 ½”
B07	PN 320	DN40 / 1 ½”
B08	PN 400 / 2500 lbs	DN40 / 1 ½”
7. Mounting Stud (material of stud has to be identical / resp. weldable to the pipe material)		
0	without	
R	mounting stud with flange (standard)	
W	weldolet-stud with flange	
8. Mounting Stud Flange (size and pressure rating has to be identical to sensor flange)		
0	without	
M	acc. DIN, form C	
A	acc. ANSI, RF	
F	acc. ANSI, SF (smooth finish)	
T	acc. ANSI, RTJ	
S	Saddle flange, size of flange: DN40, material GGG-40 EWS-coated, without retainer	
V	Saddle flange with retainer, material: rustproof steel, outside diameter pipe: 87…470 mm: gasket: NBR	
3	Saddle flange with retainer, material 1.4301, outside diameter pipe: 75…582 mm, gasket: NBR	
Z	Saddle flange with retainer, material 1.4301, for asbestos-cement pipe, outside diameter pipe: 97…494 mm, gasket: NBR	
9. Mounting Stud material, with flange, (max pressure rating)		
0	Without	

	Material	**Pressure rating**	**Size**
C1	C.S.	PN 16 / 150 lbs	DN 32 / 1 ½”
S1	316Ti	PN 16 / 150 lbs	DN 32 / 1 ½”
P1	A335 Grade P1	PN 16 / 150 lbs	DN 32 / 1 ½”
R1	A335 Grade P11	PN 16 / 150 lbs	DN 32 / 1 ½”
V1	A335 Grade P22	PN 16 / 150 lbs	DN 32 / 1 ½”
Q1	A335 Grade P91	PN 16 / 150 lbs	DN 32 / 1 ½”

C2	C.S.	PN 40	DN 32 / 1 ½”
S2	316Ti	PN 40	DN 32 / 1 ½”
P2	A335 Grade P1	PN 40	DN 32 / 1 ½”
R2	A335 Grade P11	PN 40	DN 32 / 1 ½”
V2	A335 Grade P22	PN 40	DN 32 / 1 ½”
Q2	A335 Grade P91	PN 40	DN 32 / 1 ½”

Continued next page

9. Mounting Stud material, with flange, (max pressure rating) (Continuation			
	Material	**Pressure rating**	**Size**
C3	C.S.	PN 63 / 300 lbs	DN 40 / 1 ½”
S3	316Ti	PN 63 / 300 lbs	DN 40 / 1 ½”
P3	A335 Grade P1	PN 63 / 300 lbs	DN 40 / 1 ½”
R3	A335 Grade P11	PN 63 / 300 lbs	DN 40 / 1 ½”
V3	A335 Grade P22	PN 63 / 300 lbs	DN 40 / 1 ½”
Q3	A335 Grade P91	PN 63 / 300 lbs	DN 40 / 1 ½”
C4	C.S.	PN 100 / 600 lbs	DN 40 / 1 ½”
S4	316Ti	PN 100 / 600 lbs	DN 40 / 1 ½”
P4	A335 Grade P1	PN 100 / 600 lbs	DN 40 / 1 ½”
R4	A335 Grade P11	PN 100 / 600 lbs	DN 40 / 1 ½”
V4	A335 Grade P22	PN 100 / 600 lbs	DN 40 / 1 ½”
Q4	A335 Grade P91	PN 100 / 600 lbs	DN 40 / 1 ½”
C5	C.S.	PN 160	DN 40 / 1 ½”
S5	316Ti	PN 160	DN 40 / 1 ½”
P5	A335 Grade P1	PN 160	DN 40 / 1 ½”
R5	A335 Grade P11	PN 160	DN 40 / 1 ½”
V5	A335 Grade P22	PN 160	DN 40 / 1 ½”
Q5	A335 Grade P91	PN 160	DN 40 / 1 ½”
C6	C.S.	PN 250 / 1500 lbs	DN 40 / 1 ½”
S6	316Ti	PN 250 / 1500 lbs	DN 40 / 1 ½”
P6	A335 Grade P1	PN 250 / 1500 lbs	DN 40 / 1 ½”
R6	A335 Grade P11	PN 250 / 1500 lbs	DN 40 / 1 ½”
V6	A335 Grade P22	PN 250 / 1500 lbs	DN 40 / 1 ½”
Q6	A335 Grade P91	PN 250 / 1500 lbs	DN 40 / 1 ½”
C7	C.S.	PN 320	DN 40 / 1 ½”
S7	316Ti	PN 320	DN 40 / 1 ½”
P7	A335 Grade P1	PN 320	DN 40 / 1 ½”
R7	A335 Grade P11	PN 320	DN 40 / 1 ½”
V7	A335 Grade P22	PN 320	DN 40 / 1 ½”
Q7	A335 Grade P91	PN 320	DN 40 / 1 ½”
C8	C.S.	PN 400 / 2500 lbs	DN 40 / 1 ½”
S8	316Ti	PN 400 / 2500 lbs	DN 40 / 1 ½”
P8	A335 Grade P1	PN 400 / 2500 lbs	DN 40 / 1 ½”
R8	A335 Grade P11	PN 400 / 2500 lbs	DN 40 / 1 ½”
V8	A335 Grade P22	PN 400 / 2500 lbs	DN 40 / 1 ½”
Q8	A335 Grade P91	PN 400 / 2500 lbs	DN 40 / 1 ½”

10. End Support (only IBFD-26)	
0	without end support
C	CS
S	316Ti (1.4571)
P	A335 Grade P1
R	A335 Grade P11
V	A335 Grade P22
Q	A335 Grade P91
11. Condensate Vessel with Connection	
	Please see page 107
12. Insulation	
KI	without
X..	Thickness of insulation in mm (Please advise!)
13. Pipe run at place of installation	
HL	horizontal
VL	vertical

Continued next page

14. Integrated PT-100 / RTD	
T0	without
TA	3-wire
TB	2-wire, with Ex-approval
15. Head transmitter for RTD	
	See page no. 45
16. Process connection (only for A1)	
	Please see page 169
17. Instrument valves	
	Please see page 169

Order key IBFD-25/26:

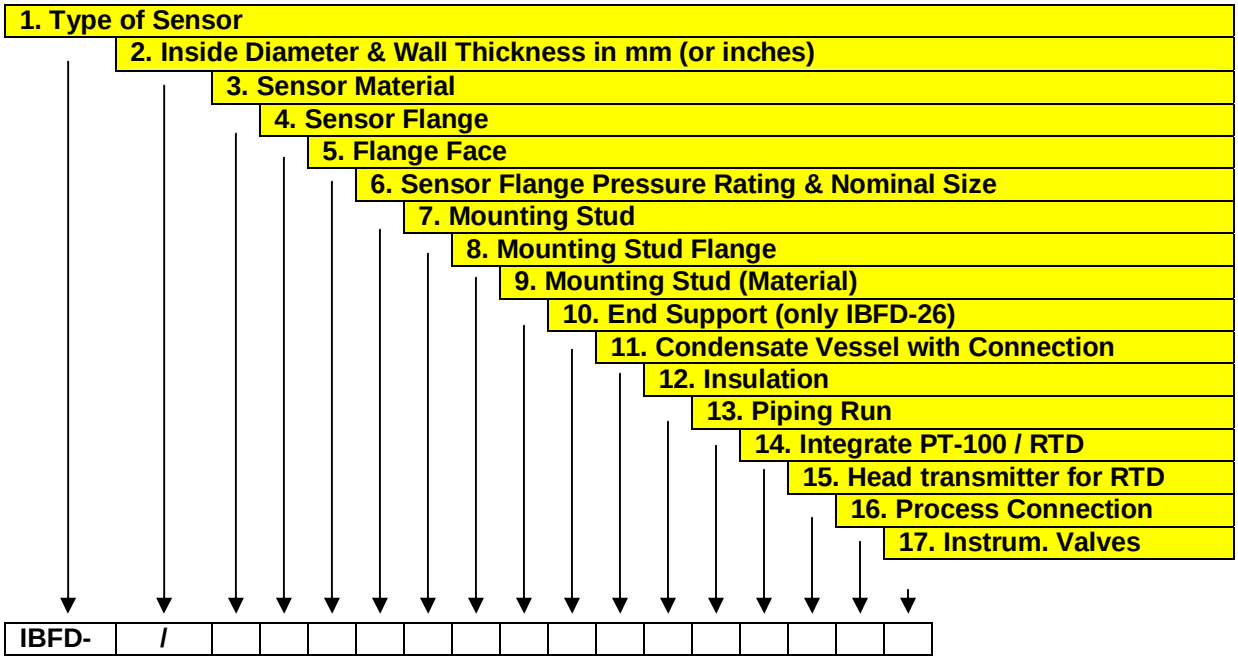

d.3) IBFD-35/36

1. Type of Sensor		
IBFD-35	without end support	
IBFD-36	with end support	
2. Inside Diameter and Wall Thickness		
ID/WT	Inside diameter and wall thickness in mm (or inches), please specify	
3. Sensor Material		
S	316Ti (1.4571)	
4. Sensor Flange (always identically to sensor material)		
SM	acc. DIN	
SA	acc. ANSI	
5. Flange Face		
1	acc. DIN	
2	ANSI RF	
3	ANSI RF SF (smooth finish)	
4	RTJ	
6. Pressure rating (PN/lbs) and nominal Size (DN / “) of Sensor Flange		
	Pressure rating	**Nominal Size**
B01	PN 16 / 150 lbs	DN 50 / 2”
B02	PN 40	DN 50 / 2”
B03	PN63 / 300 lbs	DN 50 / 2”
B04	PN 100 / 600 lbs	DN 50 / 2”
B05	PN 160	DN 50 / 2”
B06	PN 250 / 1500 lbs	DN 50 / 2”
B07	PN 320	DN 50 / 2”
B08	PN 400 / 2500 lbs	DN 50 / 2”
7. Mounting Stud (material of stud has to be identical / resp. weldable to the pipe material)		
0	without	
R	mounting stud with flange (standard)	
W	weldolet-stud with flange	
8. Mounting Stud Flange (size and pressure rating has to be identical to sensor flange)		
0	without	
M	acc. DIN, form C	
A	acc. ANSI, RF	
F	acc. ANSI, SF (smooth finish)	
T	acc. ANSI, RTJ	
S	Saddle flange, size of flange: DN40, material GGG-40 EWS-coated, without retainer	
V	Saddle flange with retainer, material: rustproof steel, outside diameter pipe: 87…470 mm: gasket: NBR	
3	Saddle flange with retainer, material 1.4301, outside diameter pipe: 75…582 mm, gasket: NBR	
Z	Saddle flange with retainer, material 1.4301, for asbestos-cement pipe, outside diameter pipe: 97…494 mm, gasket: NBR	
9. Mounting Stud material, with flange, (max pressure rating)		
0	without	

	Material	**Pressure rating**	**Size**
C1	C.S.	PN 16 / 150 lbs	DN 50 / 2”
S1	316Ti	PN 16 / 150 lbs	DN 50 / 2”
P1	A335 Grade P1	PN 16 / 150 lbs	DN 50 / 2”
R1	A335 Grade P11	PN 16 / 150 lbs	DN 50 / 2”
V1	A335 Grade P22	PN 16 / 150 lbs	DN 50 / 2”
Q1	A335 Grade P91	PN 16 / 150 lbs	DN 50 / 2”

C2	C.S.	PN 40	DN 50 / 2”
S2	316Ti	PN 40	DN 50 / 2”
P2	A335 Grade P1	PN 40	DN 50 / 2”
R2	A335 Grade P11	PN 40	DN 50 / 2”
V2	A335 Grade P22	PN 40	DN 50 / 2”
Q2	A335 Grade P91	PN 40	DN 50 / 2”

Continued next page

9. Mounting Stud material, with flange, (max pressure rating) (Continuation			
	Material	**Pressure rating**	**Size**
C3	C.S.	PN 63 / 300 lbs	DN 50 / 2”
S3	316Ti	PN 63 / 300 lbs	DN 50 / 2”
P3	A335 Grade P1	PN 63 / 300 lbs	DN 50 / 2”
R3	A335 Grade P11	PN 63 / 300 lbs	DN 50 / 2”
V3	A335 Grade P22	PN 63 / 300 lbs	DN 50 / 2”
Q3	A335 Grade P91	PN 63 / 300 lbs	DN 50 / 2”
C4	C.S.	PN 100 / 600 lbs	DN 50 / 2”
S4	316Ti	PN 100 / 600 lbs	DN 50 / 2”
P4	A335 Grade P1	PN 100 / 600 lbs	DN 50 / 2”
R4	A335 Grade P11	PN 100 / 600 lbs	DN 50 / 2”
V4	A335 Grade P22	PN 100 / 600 lbs	DN 50 / 2”
Q4	A335 Grade P91	PN 100 / 600 lbs	DN 50 / 2”
C5	C.S.	PN 160	DN 50 / 2”
S5	316Ti	PN 160	DN 50 / 2”
P5	A335 Grade P1	PN 160	DN 50 / 2”
R5	A335 Grade P11	PN 160	DN 50 / 2”
V5	A335 Grade P22	PN 160	DN 50 / 2”
Q5	A335 Grade P91	PN 160	DN 50 / 2”
C6	C.S.	PN 250 / 1500 lbs	DN 50 / 2”
S6	316Ti	PN 250 / 1500 lbs	DN 50 / 2”
P6	A335 Grade P1	PN 250 / 1500 lbs	DN 50 / 2”
R6	A335 Grade P11	PN 250 / 1500 lbs	DN 50 / 2”
V6	A335 Grade P22	PN 250 / 1500 lbs	DN 50 / 2”
Q6	A335 Grade P91	PN 250 / 1500 lbs	DN 50 / 2”
C7	C.S.	PN 320	DN 50 / 2”
S7	316Ti	PN 320	DN 50 / 2”
P7	A335 Grade P1	PN 320	DN 50 / 2”
R7	A335 Grade P11	PN 320	DN 50 / 2”
V7	A335 Grade P22	PN 320	DN 50 / 2”
Q7	A335 Grade P91	PN 320	DN 50 / 2”
C8	C.S.	PN 400 / 2500 lbs	DN 50 / 2”
S8	316Ti	PN 400 / 2500 lbs	DN 50 / 2”
P8	A335 Grade P1	PN 400 / 2500 lbs	DN 50 / 2”
R8	A335 Grade P11	PN 400 / 2500 lbs	DN 50 / 2”
V8	A335 Grade P22	PN 400 / 2500 lbs	DN 50 / 2”
Q8	A335 Grade P91	PN 400 / 2500 lbs	DN 50 / 2”
10. End Support (only IBFD-36)			
0	without end support		
C	CS		
S	316Ti (1.4571)		
P	A335 Grade P1		
R	A335 Grade P11		
V	A335 Grade P22		
Q	A335 Grade P91		
11. Condensate Vessel with Connection			
	Please see page 107		
12. Insulation			
KI	Without		
X..	Thickness of insulation in mm (Please advise!)		
13. Pipe run at place of installation			
HL	horizontal		
VL	vertical		

Continued next page

14. Integrated PT-100 / RTD	
T0	without
TA	3-wire
TB	2-wire, with Ex-approval
15. Head transmitter for RTD	
	See page no. 45
16. Process connection (only for A1)	
	Please see page 169
17. Instrument valves	
	Please see page 169

Order key IBFD-35/36:

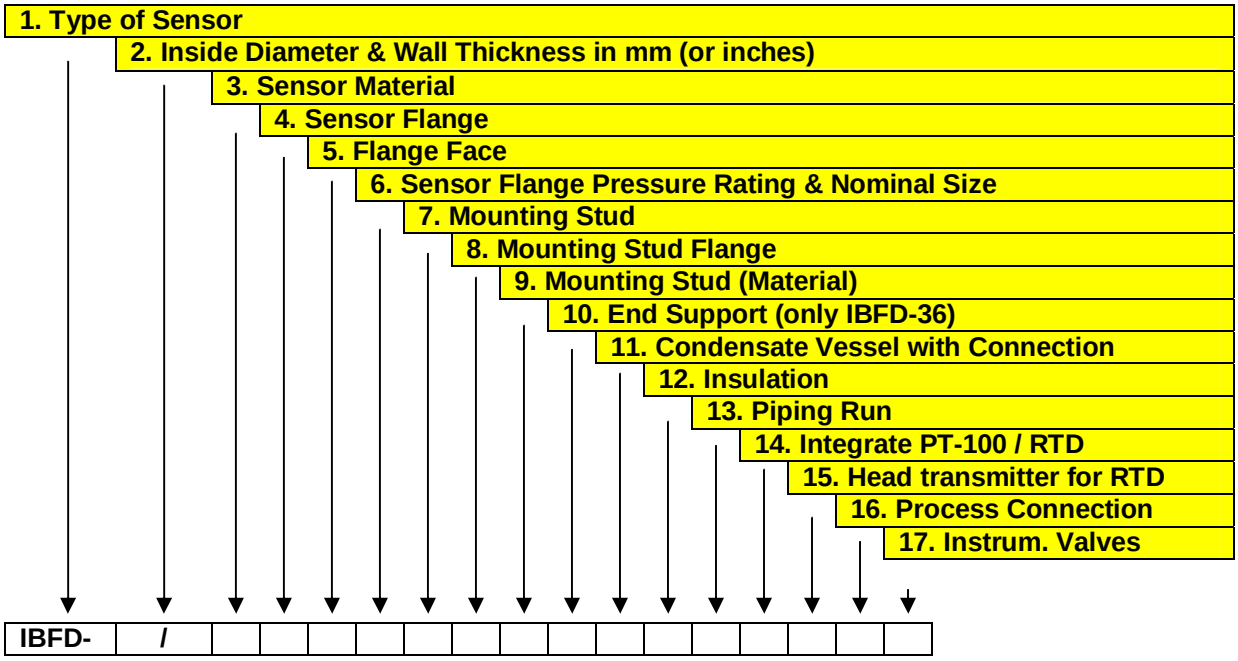

e) Order Specification for Condensate Vessels, Instrument Connection and Shut-Off-Valves for Itabar-Flow-Sensors type IBFD (up to PN100)

Flanged Joint at Sensor Head (1 pair)		
K0	without condensate vessels	
K1	condensate vessel, weld sockets 21,3 mm, edge form 21 acc. DIN 2559	
K3	condensate vessel with R ½" screw neck for screwed flange acc. DIN 19207	
K4	condensate vessel with ½"NPT screw neck	
K5	condensate vessel with Ermeto-coupling for 12 mm pipe (DIN 2353)	
Material and Size for Condensate Vessels		
	Material	**Size**
H	A 285 (P 265 GH) "heavy boiler plate HII"	∅ 88,9 x 5 mm
S	316Ti (1.4571)	∅ 88,9 x 5 mm
P	A335 Grade P1 (1.5415; 16Mo3)	∅ 90 x 17,5 mm
V	A335 Grade P11 (1.7335; 13CrMo44)	∅ 90 x 17,5 mm

Shut-off-Device for Impulse Pipe, standard with welded condensate vessel (1 pair)				
	Type	**Nominal Pressure**	**Connection**	**Material**
A00	without shut-off-device			
A81	ANSI gate valve	800 lbs	½" NPT	Housing: A105 (C22) Packing graphite-fiber-glass
A82	ANSI gate valve	800 lbs	½" NPT	Housing: 316L (1.4404) Packing graphite-fiber-glass
only with K1				
A13	Shut-off valve	PN400	½" NPT welding stud ∅21,3x3,2mm	A335 Gr. P1 Packing: Graphite
A13	Shut-off valve	PN400	½" NPT welding stud ∅21,3x3,2mm	A335 Gr. P11 Packing: Graphite

Only for compact version:

Flanged Joint at Sensor Head (1 pair)		
A1	condensate vessel with sensor head, impulse pipe and mounting flange directly welded	
Material and Size of Condensate Vessel		
	Material	**Size**
H	A 285 (P 265 GH) "heavy boiler plate HII"	∅ 88,9 x 5 mm
S	316Ti (1.4571)	∅ 88,9 x 5 mm
P	A335 Grade P1 (1.5415; 16Mo3)	∅ 90 x 17,5 mm
V	A335 Grade P11 (1.7335; 13CrMo44)	∅ 90 x 17,5 mm

Connection (only in combination with A1)	
A06	flange plate for 3-way-manifold, material: 316Ti (1.4571)
A15	flange plate for 3-way-manifold, material: 316Ti (1.4571)

Shut-off-Device for Impulse Pipe (only in combination with A1				
	Type	Nominal Pressure	Material	Packing
A00	without shut-off-device			
A66	3-way manifold	PN 400	A182-F316L (1.4401)	Graphite
A71	5-way-manifold	PN 400	A182-F316L (1.4401)	Graphite

e1) Order Specification for Condensate Vessels, Instrument Connection and Shut-Off-Valves for Itabar-Flow-Sensors type IBFD (up to PN400)

High-Pressure Shut-Off Valve acc. VdTÜV					
Shut-off device for impulse pipe (1 pair)		**Short name**	**DIN /ANSI material no.**	**Dimensions welding connection**	**Packing**
A16	Shut off-valve, PN320, TRD 110, TRB 801 No. 45	16Mo3	1.5415 A335 Gr. P1	21,3x3,2mm	Graphite
A17	Shut off-valve, PN320, TRD 110, TRB 801 No. 45	13CrMo44	1.7335 A335 Gr. P11	21,3x3,2mm	Graphite
A18	Shut off-valve, PN320, TRD 110, TRB 801 No. 45	10CrMo910	1.7380 A335 Gr. P22	21,3x3,2mm	Graphite
A19	Shut off-valve, PN500, TRD 110, TRB 801 No. 45	16Mo3	1.5415 A335 Gr. P1	21,3x3,2mm	Graphite
A20	Shut off-valve, PN500, TRD 110, TRB 801 No. 45	13CrMo44	1.7335 A335 Gr. P11	21,3x3,2mm	Graphite
A21	Shut off-valve, PN500, TRD 110, TRB 801 No. 45	10CrMo910	1.7380 A335 Gr. P22	21,3x3,2mm	Graphite
A22		X10CrMoVNb91	1.4903 A335 Fr. P91	21,3x3,2mm	Graphite

Combination condensate vessel and shut-off valve				
Shut-off device for impulse pipe (1 pair)		**Short name**	**DIN / ANSI material no.**	**Packing**
KV02	Condensate vessel and shut-off valve as weld unit, welding stud 21,3 mm	16Mo3	1.5415 A335 Gr. P1	Graphite
KV03	Condensate vessel and shut-off valve as weld unit, welding stud 21,3 mm	13CrMo44	1.7335 A335 Gr. P11	Graphite
KV04	Condensate vessel and shut-off valve as weld unit, welding stud 21,3 mm	10CrMo910	1.7380 A335 Gr. P22	Graphite

C2.3 Itabar®-Flow-Sensors with Flanged Process Connection / for Superheated Steam Types: IBFD-26/36-HT (up to 5802 psi [400 bar] and 1202 °F [650 °C])

a.) Description

With its strengthened sensor head and assembly parts sensor type IBFD-HT is especially designed for use in superheated steam applications with high operating pressures and temperatures.

Materials	Max. Steam Temperature
1.5415 (15 Mo 3)	986 °F / 530 °C
1.7335 (10 CrMo 4 4)	1022 °F / 570 °C
1.7380 (10 CrMo 9 10)	1058°F / 600 °C
1.4903 (10 CrMoVNB 91)	1202°F / 650 °C

Fig 58: IBFD-HT

b) Drawing for IBFD-HT

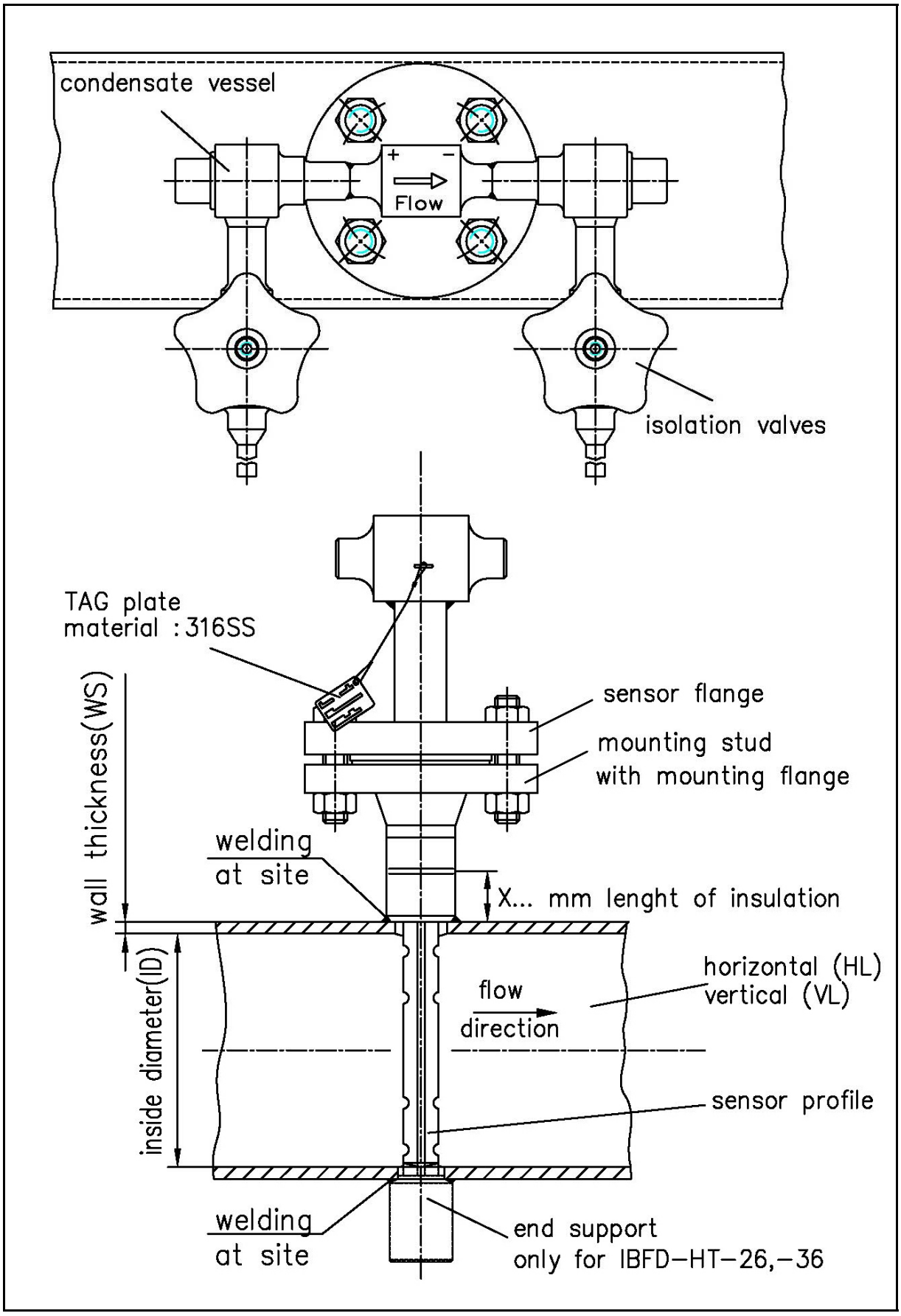

c.) Order Data for Itabar® Series IBFD-26/36-HT

c.1) Sensor type:

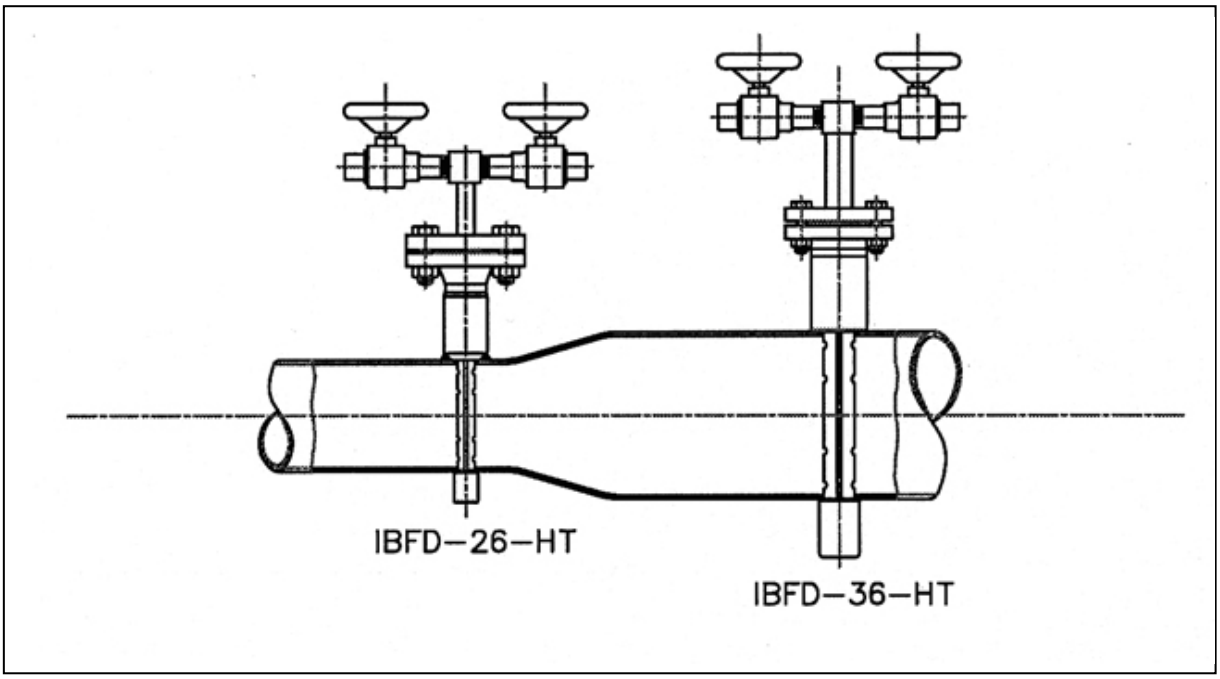

Pipe ID DN	Pipe ID Inches	Max. allowable volume flow m³/h	
		IBFD –26-HT	IBFD –36-HT
100	4	1103	---
125	5	1456	---
150	6	1810	---
200	8	2516	---
250	10	3286	---
300	12	4119	4501
350	14	4925	5399
400	16	5706	6300
500	20	7341	8018
600	24	8948	9716

These values are for water of ρ = 0,9982 kg/l SGU and at a temperature T = 20 °C. To calculate volumetric or mass flow of fluids with other densities see chapter 6 „Specifications of DP Sensors with WINFLOW“.

Selection and Specification of a Steam- flow-Sensor
P-max. 5880 PSI (400 bar), P-T-max. 1202 °F

Order Example for ITABAR Flow Sensor, HT-Version

Existing Process Data

Pipe size	12“
Medium	Steam
Pressure	3822 PSI (260 bar)
Temperature	1184°F (640°C)
Material of existing pipe	10 CrMo 910

1. Determine the material of the pipe (to determine welding compatibility), in this example 10 CrMo 910.
2. From table , page 151, determine pressure specs of assembly welding boss.
3. From table, 135 determine compatible material – 10 CrMoVNb 91
4. With Winflow program determine the right sensor type (considering flow velocity). In this case the recommended sensor is IBFD-26-HT.
5. Selection of condensate pots and shut-off valves, see table page 153/154. If a combination condensate pots / shut-off valves is required see table 155. For the case of this example the table does not offer a combination. Thus condensate pots and shut-off valves must be ordered separately.
6. Isolation of pipe – in this example 200 mm
7. Pipe configuration – in this example vertical

Order code example

IBFD-26-HT-ID300/14mm-C-SM-1-D8-W-M-S37-C-K8-A22-A22-X200-VL

INTRA-AUTOMATION GmbH

D-41515 Grevenbroich * Otto-Hahn-Str. 20 * Tel: +49 2181-68761 * Fax: +49 2181-64492

WINFLOW 2.75 (I) Diff. Pressure Calculation
ITABAR - Flow - Sensor

Company:	Mustermann
Name(capital letters):	
Street:	
Zip Code/City:	
Offer-/Com. No:	
P. Order Number:	
Tag No.:	
Serial No.:	
Pipe Data:	ID= 300,000/15,000 mm - horizontal
Date:	18.04.2002
Person in charge	U.P.
Calculation:	Mass rate Gas & steam
Fluid:	Superheated steam

Pipe Internal Dimensions	300,000	mm
Flowing Temperature:	640,000	°C
Flowing Pressure:	260,000	bar A
Density:	68,669	kg/m3
Viscosity:	0,0359	cPs
K-Factor:	0,6274	without unit

Base Temperature	**273,15 Kelvin**
Base Pressure	**101,30 kPa**

	QMax	QNorm	QMin	
Flow Rate	50.000,00	40.000,00	10.000,00	kg/H
Reynolds No.	1.637.037	1.309.630	327.407	without unit
Permanent press. loss	6,290	4,020	0,250	mbar
Expansionsfactor	1,000	1,000	1,000	without unit
Velocity:	2,86	2,29	0,57	m/sec.
Differential Pressure	**6,913**	**4,424**	**0,277**	**mbar**

Itabar-Type: IBFD-26 HT-C-SM-1-D6-W-M-S37-C-K8-A22-A22-X200-VL
Material Sensor: A335 GRADE P11 (10CrMoVNb 91)
Note:

Max. DeltaP	1.905,20 mbar	Max. Flow Rate	830.064,63 kg/H
Natural Freq.:	121,16		

d.) Order Specification Itabar-Flow-Sensors, Series IBFD-HT

d1) IBFD-26-HT

1. Type of Sensor			
IBFD-26-HT	IBFD-26-HT		
2. Inside Diameter and Wall Thickness			
ID/WT	Inside diameter and wall thickness in mm (or inches), please specify		
3. Sensor Material			
	Material	**Max. Temperature**	
P	1.5415 (16Mo3)	986 °F / 530 °C	
V	1.7335 (13CrMo44)	1058 °F / 570 °C	
R	1.7380 (10CrMo910)	1112 °F / 600 °C	
C	1.4903 (X10CrMoVNb91)	1202 °F / 650 °C	
4. Sensor Flange (always identically to sensor material)			
SM	acc. DIN		
SA	acc. ANSI		
5. Flange Face			
1	acc. DIN		
2	ANSI RF		
3	ANSI RF SF (smooth finish)		
4	RTJ		
6. Sensor Flange, nominal Pressure (PN / lbs), material and size (DN / inches)			
	Nominal pressure	**Material**	**Size**
A1	PN 16 / 150 lbs	1.5415 (16Mo3)	DN32 / 1 ½”
A2	PN 40	1.5415 (16Mo3)	DN32 / 1 ½”
A3	PN 63 / 300 lbs	1.5415 (16Mo3)	DN40 / 1 ½”
A4	PN 100 / 600 lbs	1.5415 (16Mo3)	DN40 / 1 ½”
A5	PN 160	1.5415 (16Mo3)	DN40 / 1 ½”
A6	PN 250 / 1500 lbs	1.5415 (16Mo3)	DN40 / 1 ½”
A7	PN 320	1.5415 (16Mo3)	DN40 / 1 ½”
A8	PN 400 / 2500 lbs	1.5415 (16Mo3)	DN40 / 1 ½”
B1	PN 16 / 150 lbs	1.7335 (13CrMo44)	DN32 / 1 ½”
B2	PN 40	1.7335 (13CrMo44)	DN32 / 1 ½”
B3	PN 63 / 300 lbs	1.7335 (13CrMo44)	DN40 / 1 ½”
B4	PN 100 / 600 lbs	1.7335 (13CrMo44)	DN40 / 1 ½”
B5	PN 160	1.7335 (13CrMo44)	DN40 / 1 ½”
B6	PN 250 / 1500 lbs	1.7335 (13CrMo44)	DN40 / 1 ½”
B7	PN 320	1.7335 (13CrMo44)	DN40 / 1 ½”
B8	PN 400 / 2500 lbs	1.7335 (13CrMo44)	DN40 / 1 ½”
C1	PN 16 / 150 lbs	1.7380 (10CrMo910)	DN32 / 1 ½”
C2	PN 40	1.7380 (10CrMo910)	DN32 / 1 ½”
C3	PN 63 / 300 lbs	1.7380 (10CrMo910)	DN40 / 1 ½”
C4	PN 100 / 600 lbs	1.7380 (10CrMo910)	DN40 / 1 ½”
C5	PN 160	1.7380 (10CrMo910)	DN40 / 1 ½”
C6	PN 250 / 1500 lbs	1.7380 (10CrMo910)	DN40 / 1 ½”
C7	PN 320	1.7380 (10CrMo910)	DN40 / 1 ½”
C8	PN 400 / 2500 lbs	1.7380 (10CrMo910)	DN40 / 1 ½”
D1	PN 16 / 150 lbs	1.4903 (X10CrMoVNb91)	DN32 / 1 ½”
D2	PN 40	1.4903 (X10CrMoVNb91)	DN32 / 1 ½”
D3	PN 63 / 300 lbs	1.4903 (X10CrMoVNb91)	DN40 / 1 ½”
D4	PN 100 / 600 lbs	1.4903 (X10CrMoVNb91)	DN40 / 1 ½”
D5	PN 160	1.4903 (X10CrMoVNb91)	DN40 / 1 ½”
D6	PN 250 / 1500 lbs	1.4903 (X10CrMoVNb91)	DN40 / 1 ½”
D7	PN 320	1.4903 (X10CrMoVNb91)	DN40 / 1 ½”
D8	PN 400 / 2500 lbs	1.4903 (X10CrMoVNb91)	DN40 / 1 ½”
7. Mounting stud (material of stud has to be identical / resp. weldable to the pipe material)			
0	without		
R	Mounting stud with flange (standard)		
W	Weldolet mounting stud and flange		

Continued next page

8. Mounting stud (size and pressure rating has to be identical to sensor flange)			
0	without		
M	acc. DIN, flange face form C		
A	acc. ANSI, flange face RF		
F	acc. ANSI, flange face SF (smooth finish)		
T	acc. ANSI, flange face RTJ		
9. Mounting stud flange, material, nominal pressure (PN / lbs), size (DN / inch)			
	Material	**Nominal pressure**	**Size**
S15	1.5415 (16Mo3)	PN 16 / 150 lbs	DN32 / 1 ½”
S44	1.7335 (13CrMo44)	PN 16 / 150 lbs	DN32 / 1 ½”
S91	1.7380 (10CrMo910)	PN 16 / 150 lbs	DN32 / 1 ½”
S30	1.4903 (X10CrMoVNb91)*	PN 16 / 150 lbs	DN32 / 1 ½”
S16	1.5415 (16Mo3)	PN 40 / 150 lbs	DN32 / 1 ½”
S45	1.7335 (13CrMo44)	PN 40 / 150 lbs	DN32 / 1 ½”
S92	1.7380 (10CrMo910)	PN 40 / 150 lbs	DN32 / 1 ½”
S31	1.4903 (X10CrMoVNb91)*	PN 40 / 150 lbs	DN32 / 1 ½”
S17	1.5415 (16Mo3)	PN 63 / 300 lbs	DN40 / 1 ½”
S46	1.7335 (13CrMo44)	PN 63 / 300 lbs	DN40 / 1 ½”
S93	1.7380 (10CrMo910)	PN 63 / 300 lbs	DN40 / 1 ½”
S32	1.4903 (X10CrMoVNb91)*	PN 63 / 300 lbs	DN40 / 1 ½”
S18	1.5415 (16Mo3)	PN 100 / 600 lbs	DN40 / 1 ½”
S47	1.7335 (13CrMo44)	PN 100 / 600 lbs	DN40 / 1 ½”
S94	1.7380 (10CrMo910)	PN 100 / 600 lbs	DN40 / 1 ½”
S33	1.4903 (X10CrMoVNb91)*	PN 100 / 600 lbs	DN40 / 1 ½”
S19	1.5415 (16Mo3)	PN 160 / 600 lbs	DN40 / 1 ½”
S48	1.7335 (13CrMo44)	PN 160 / 600 lbs	DN40 / 1 ½”
S95	1.7380 (10CrMo910)	PN 160 / 600 lbs	DN40 / 1 ½”
S34	1.4903 (X10CrMoVNb91)*	PN 160 / 600 lbs	DN40 / 1 ½”
S20	1.5415 (16Mo3)	PN 250 / 1500 lbs	DN40 / 1 ½”
S49	1.7335 (13CrMo44)	PN 250 / 1500 lbs	DN40 / 1 ½”
S96	1.7380 (10CrMo910)	PN 250 / 1500 lbs	DN40 / 1 ½”
S35	1.4903 (X10CrMoVNb91)*	PN 250 / 1500 lbs	DN40 / 1 ½”
S21	1.5415 (16Mo3)	PN 320 / 1500 lbs	DN40 / 1 ½”
S50	1.7335 (13CrMo44)	PN 320 / 1500 lbs	DN40 / 1 ½”
S97	1.7380 (10CrMo910)	PN 320 / 1500 lbs	DN40 / 1 ½”
S36	1.4903 (X10CrMoVNb91)*	PN 320 / 1500 lbs	DN40 / 1 ½”
S22	1.5415 (16Mo3)	PN 400 / 2500 lbs	DN40 / 1 ½”
S51	1.7335 (13CrMo44)	PN 400 / 2500 lbs	DN40 / 1 ½”
S98	1.7380 (10CrMo910)	PN 400 / 2500 lbs	DN40 / 1 ½”
S37	1.4903 (X10CrMoVNb91)*	PN 400 / 2500 lbs	DN40 / 1 ½”

*do not weld together with 1.7335

10. End Support	
0	without (if already existing)
P	1.5415 (16Mo3)
V	1.7335 (13CrMo44)
R	1.7380 (10CrMo910)
C	1.4903 (X10CrMoVNb91)
11. Condensate Vessel with Connection	
	Please see page 191
12. Process Connection & Instrument Valves	
	Please see page 191
13. Insulation	
KI	without
X..	Thickness of insulation in mm (Please advise!)
14. Pipe run at place of installation	
HL	horizontal
VL	vertical

Order key IBFD-26-HT

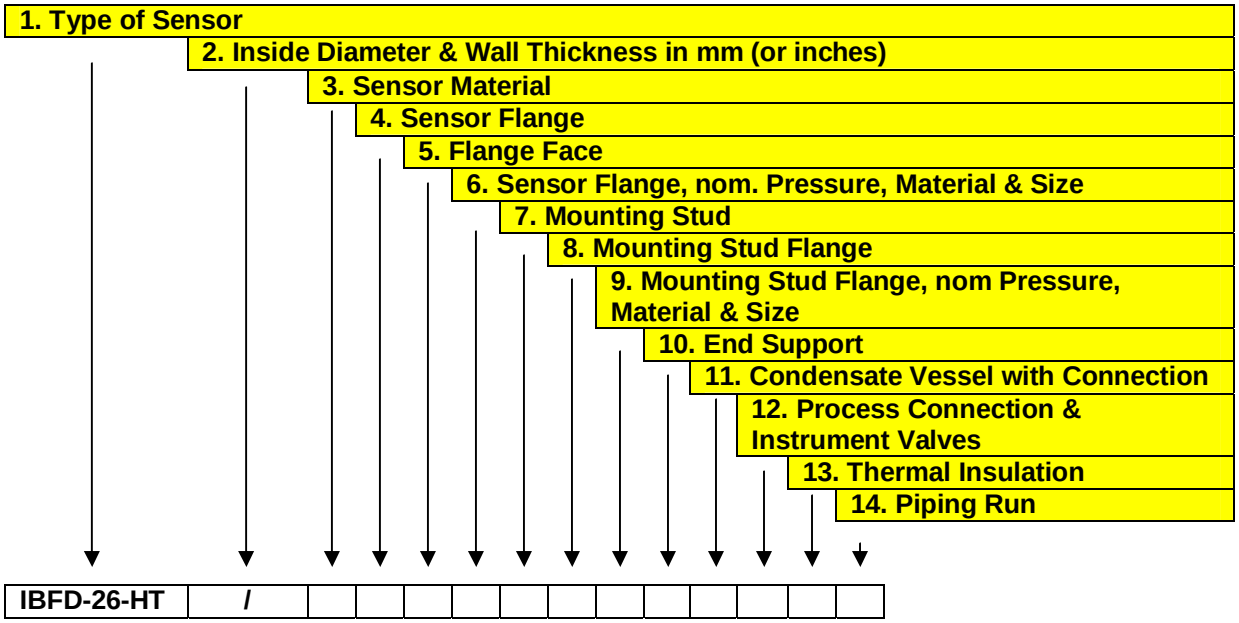

d2) IBFD-36-HT

1. Type of Sensor		
IBFD-36-HT	IBFD-26-HT	
2. Inside Diameter and Wall Thickness		
ID/WT	Inside diameter and wall thickness in mm (or inches), please specify	
3. Sensor Material		
	Material	**Max. Temperature**
P	1.5415 (16Mo3)	986 °F / 530 °C
V	1.7335 (13CrMo44)	1058 °F / 570 °C
R	1.7380 (10CrMo910)	1112 °F / 600 °C
C	1.4903 (X10CrMoVNb91)	1202 °F / 650 °C
4. Sensor Flange (always identically to sensor material)		
SM	acc. DIN	
SA	acc. ANSI	
5. Flange Face		
1	acc. DIN	
2	ANSI RF	
3	ANSI RF SF (smooth finish)	
4	RTJ	

6. Sensor Flange, nominal Pressure (PN / lbs), material and size (DN / inches)			
	Nominal pressure	**Material**	**Size**
A1	PN 16 / 150 lbs	1.5415 (16Mo3)	DN50 / 2”
A2	PN 40	1.5415 (16Mo3)	DN50 / 2”
A3	PN 63 / 300 lbs	1.5415 (16Mo3)	DN50 / 2”
A4	PN 100 / 600 lbs	1.5415 (16Mo3)	DN50 / 2”
A5	PN 160	1.5415 (16Mo3)	DN50 / 2”
A6	PN 250 / 1500 lbs	1.5415 (16Mo3)	DN50 / 2”
A7	PN 320	1.5415 (16Mo3)	DN50 / 2”
A8	PN 400 / 2500 lbs	1.5415 (16Mo3)	DN50 / 2”
B1	PN 16 / 150 lbs	1.7335 (13CrMo44)	DN50 / 2”
B2	PN 40	1.7335 (13CrMo44)	DN50 / 2”
B3	PN 63 / 300 lbs	1.7335 (13CrMo44)	DN50 / 2”
B4	PN 100 / 600 lbs	1.7335 (13CrMo44)	DN50 / 2”
B5	PN 160	1.7335 (13CrMo44)	DN50 / 2”
B6	PN 250 / 1500 lbs	1.7335 (13CrMo44)	DN50 / 2”
B7	PN 320	1.7335 (13CrMo44)	DN50 / 2”
B8	PN 400 / 2500 lbs	1.7335 (13CrMo44)	DN50 / 2”
C1	PN 16 / 150 lbs	1.7380 (10CrMo910)	DN50 / 2”
C2	PN 40	1.7380 (10CrMo910)	DN50 / 2”
C3	PN 63 / 300 lbs	1.7380 (10CrMo910)	DN50 / 2”
C4	PN 100 / 600 lbs	1.7380 (10CrMo910)	DN50 / 2”
C5	PN 160	1.7380 (10CrMo910)	DN50 / 2”
C6	PN 250 / 1500 lbs	1.7380 (10CrMo910)	DN50 / 2”
C7	PN 320	1.7380 (10CrMo910)	DN50 / 2”
C8	PN 400 / 2500 lbs	1.7380 (10CrMo910)	DN50 / 2”
D1	PN 16 / 150 lbs	1.4903 (X10CrMoVNb91)	DN50 / 2”
D2	PN 40	1.4903 (X10CrMoVNb91)	DN50 / 2”
D3	PN 63 / 300 lbs	1.4903 (X10CrMoVNb91)	DN50 / 2”
D4	PN 100 / 600 lbs	1.4903 (X10CrMoVNb91)	DN50 / 2”
D5	PN 160	1.4903 (X10CrMoVNb91)	DN50 / 2”
D6	PN 250 / 1500 lbs	1.4903 (X10CrMoVNb91)	DN50 / 2”
D7	PN 320	1.4903 (X10CrMoVNb91)	DN50 / 2”
D8	PN 400 / 2500 lbs	1.4903 (X10CrMoVNb91)	DN50 / 2”

7. Mounting stud (material of stud has to be identical / resp. weldable to the pipe material)	
0	without
R	Mounting stud with flange (standard)
W	Weldolet mounting stud and flange

Continued next page

8. Mounting stud (size and pressure rating has to be identical to sensor flange)			
0	without		
M	acc. DIN, flange face form C		
A	acc. ANSI, flange face RF		
F	acc. ANSI, flange face SF (smooth finish)		
T	acc. ANSI, flange face RTJ		
9. Mounting stud flange, material, nominal pressure (PN / lbs), size (DN / inch)			
	Material	**Nominal pressure**	**Size**
S15	1.5415 (16Mo3)	PN 16 / 150 lbs	DN50 / 2”
S44	1.7335 (13CrMo44)	PN 16 / 150 lbs	DN50 / 2”
S91	1.7380 (10CrMo910)	PN 16 / 150 lbs	DN50 / 2”
S30	1.4903 (X10CrMoVNb91)*	PN 16 / 150 lbs	DN50 / 2”
S16	1.5415 (16Mo3)	PN 40 / 150 lbs	DN50 / 2”
S45	1.7335 (13CrMo44)	PN 40 / 150 lbs	DN50 / 2”
S92	1.7380 (10CrMo910)	PN 40 / 150 lbs	DN50 / 2”
S31	1.4903 (X10CrMoVNb91)*	PN 40 / 150 lbs	DN50 / 2”
S17	1.5415 (16Mo3)	PN 63 / 300 lbs	DN50 / 2”
S46	1.7335 (13CrMo44)	PN 63 / 300 lbs	DN50 / 2”
S93	1.7380 (10CrMo910)	PN 63 / 300 lbs	DN50 / 2”
S32	1.4903 (X10CrMoVNb91)*	PN 63 / 300 lbs	DN50 / 2”
S18	1.5415 (16Mo3)	PN 100 / 600 lbs	DN50 / 2”
S47	1.7335 (13CrMo44)	PN 100 / 600 lbs	DN50 / 2”
S94	1.7380 (10CrMo910)	PN 100 / 600 lbs	DN50 / 2”
S33	1.4903 (X10CrMoVNb91)*	PN 100 / 600 lbs	DN50 / 2”
S19	1.5415 (16Mo3)	PN 160 / 600 lbs	DN50 / 2”
S48	1.7335 (13CrMo44)	PN 160 / 600 lbs	DN50 / 2”
S95	1.7380 (10CrMo910)	PN 160 / 600 lbs	DN50 / 2”
S34	1.4903 (X10CrMoVNb91)*	PN 160 / 600 lbs	DN50 / 2”
S20	1.5415 (16Mo3)	PN 250 / 1500 lbs	DN50 / 2”
S49	1.7335 (13CrMo44)	PN 250 / 1500 lbs	DN50 / 2”
S96	1.7380 (10CrMo910)	PN 250 / 1500 lbs	DN50 / 2”
S35	1.4903 (X10CrMoVNb91)*	PN 250 / 1500 lbs	DN50 / 2”
S21	1.5415 (16Mo3)	PN 320 / 1500 lbs	DN50 / 2”
S50	1.7335 (13CrMo44)	PN 320 / 1500 lbs	DN50 / 2”
S97	1.7380 (10CrMo910)	PN 320 / 1500 lbs	DN50 / 2”
S36	1.4903 (X10CrMoVNb91)*	PN 320 / 1500 lbs	DN50 / 2”
S22	1.5415 (16Mo3)	PN 400 / 2500 lbs	DN50 / 2”
S51	1.7335 (13CrMo44)	PN 400 / 2500 lbs	DN50 / 2”
S98	1.7380 (10CrMo910)	PN 400 / 2500 lbs	DN50 / 2”
S37	1.4903 (X10CrMoVNb91)*	PN 400 / 2500 lbs	DN50 / 2”

*do not weld together with 1.7335

10. End Support	
0	without (if already existing)
P	1.5415 (16Mo3)
V	1.7335 (13CrMo44)
R	1.7380 (10CrMo910)
C	1.4903 (X10CrMoVNb91)
11. Condensate Vessel with Connection	
	Please see page 191
12. Process Connection & Instrument Valves	
	Please see page 191
13. Insulation	
KI	without
X..	Thickness of insulation in mm (Please advise!)
14. Pipe run at place of installation	
HL	horizontal
VL	vertical

Order key IBFD-36-HT

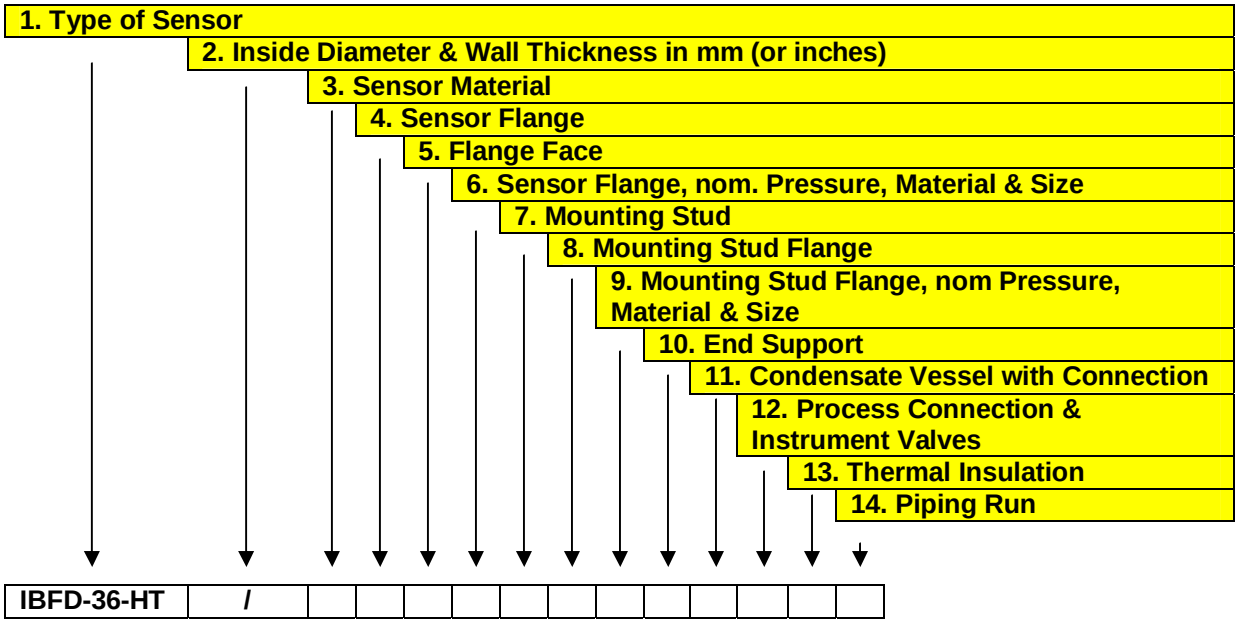

C.2.4 Itabar®-Flow-Sensors as completely welded construction / for Superheated Steam Types: IBFD-26/36-HTG (up to 5802 psi [400 bar])

a.) Description

Sensor series IBFD-HTG is designed to measure volumetric / mass flow of superheated steam. Because of high safety related requirements the sensor is only manufactured in a welded construction, which afterwards is stress-free annealing. A (German) VdTÜV component test is done for certain types of IBFD-26 HTG.

Materials	Max. steam temperature
1.5415 (15 Mo 3)	986 °F / 530 °C
1.7335 (10 CrMo 4 4)	1022 °F / 570 °C
1.7380 (10 CrMo 9 10)	1058 °F / 600 °C
1.4903 (10 CrMoVNB 91)	1202 °F / 650 °C

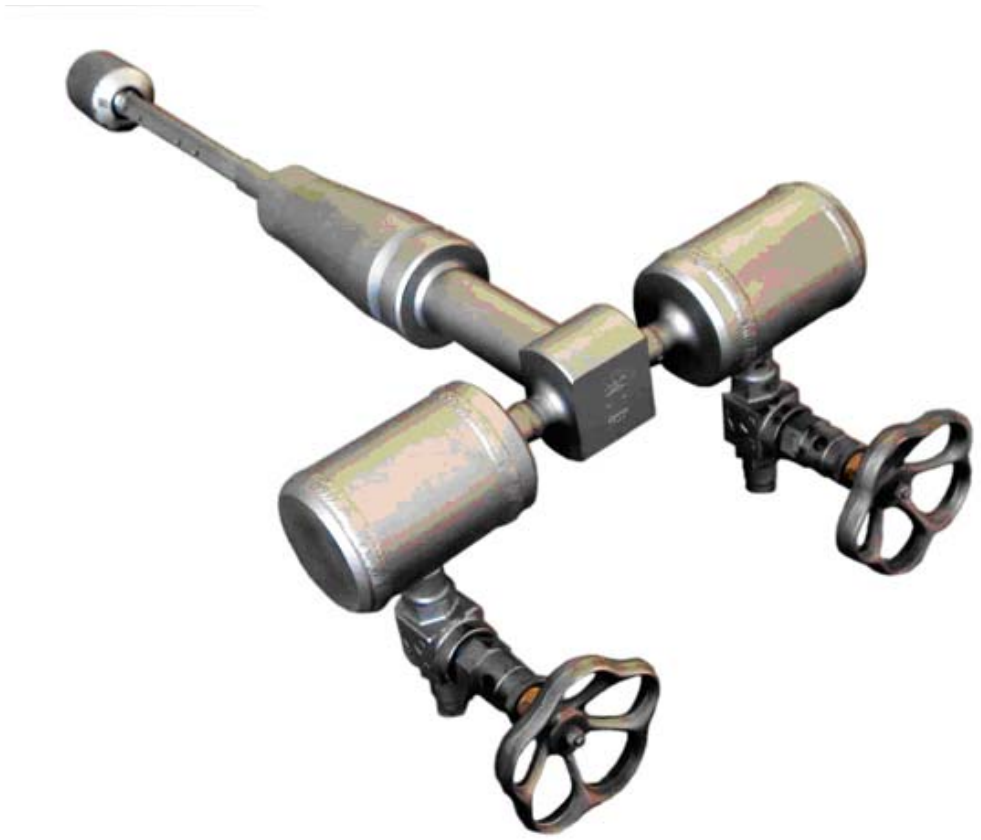

Fig 59: IBFD-HTG

b) Drawing for IBFD-HTG

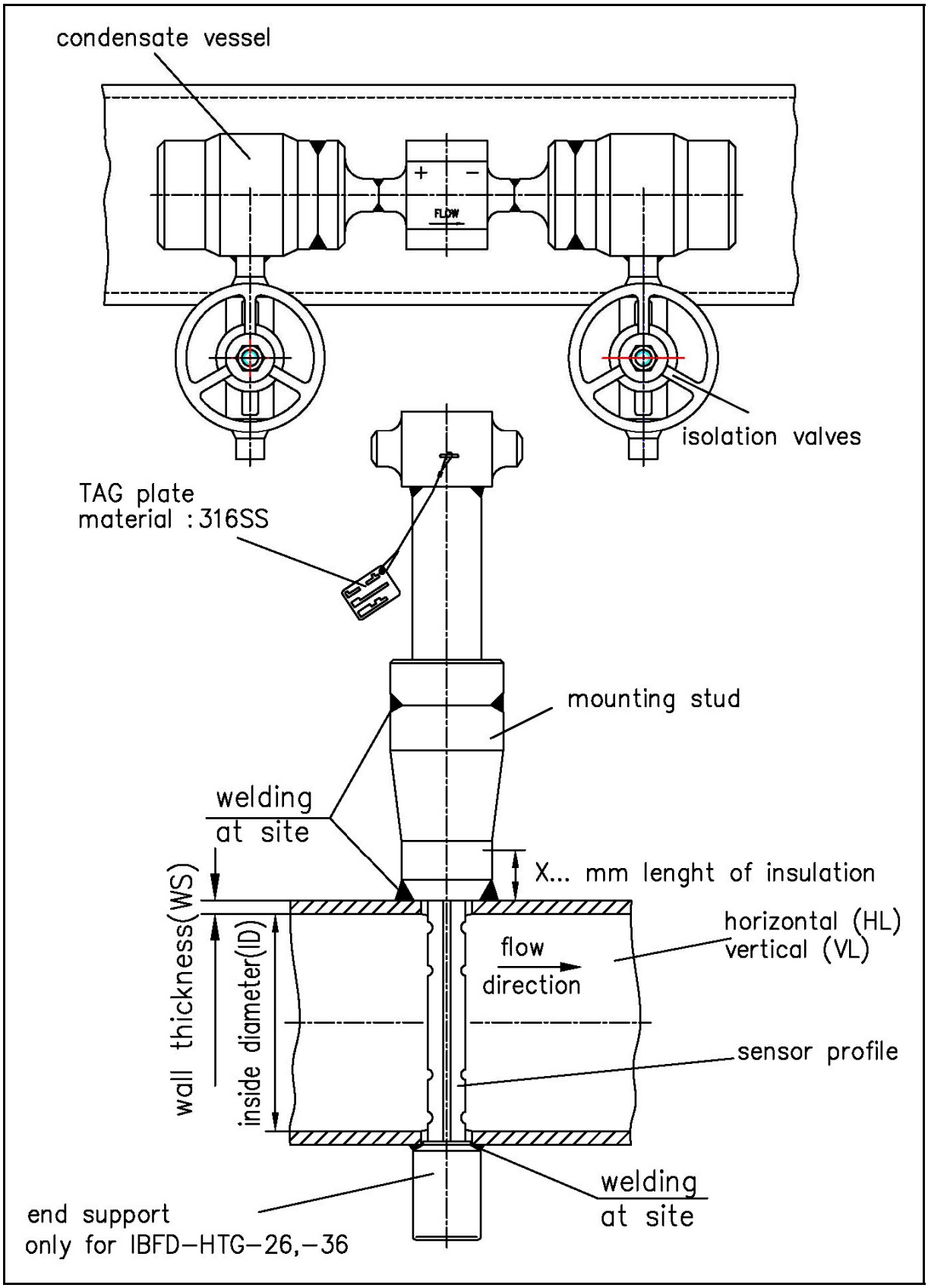

c.) Order Data for Itabar® Series IBFD-26/36-HTG

c.1) Sensor type:

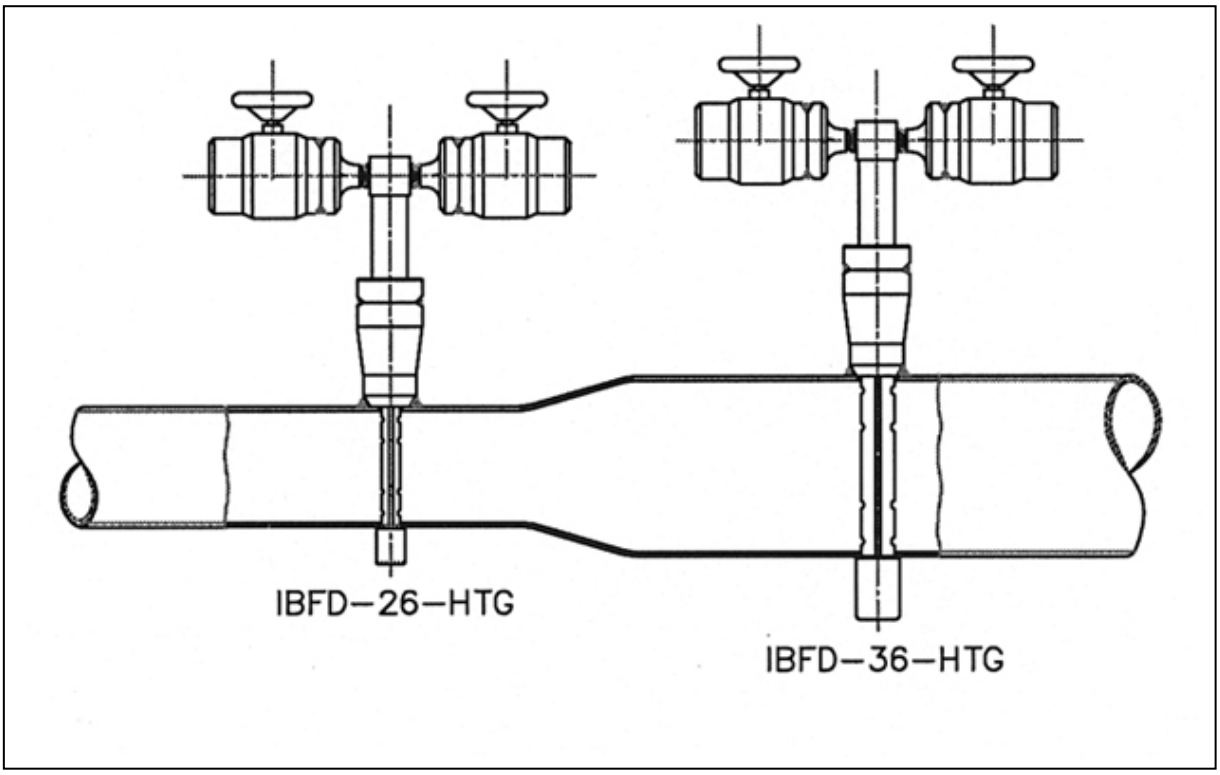

Pipe Size DN	Pipe Size Inches	Maximum flow volume Q_v in m³/h	
		IBFD –26-HTG	IBFD –36-HTG
100	4	1103	---
125	5	1456	---
150	6	1810	---
200	8	2516	---
250	10	3286	---
300	12	4119	4501
350	14	4925	5399
400	16	5706	6300
500	20	7341	8018
600	24	8948	9716

These values are for water of ρ = 0,9982 kg/l SGU and at a temperature T = 20 °C. To calculate volumetric or mass flow of fluids with other densities see chapter 6 „Specifications of DP Sensors with WINFLOW“.

d.) Order Specification Itabar-Flow-Sensors, Series IBFD-HTG

d1) IBFD-26-HTG

1. Type of Sensor		
IBFD-26-HTG	IBFD-26-HTG	
2. Inside Diameter and Wall Thickness		
ID/WT	Inside diameter and wall thickness in mm (or inches), please specify	
3. Sensor Material		
	Material	**Max. Temperature**
P	1.5415 (16Mo3)	986 °F / 530 °C
V	1.7335 (13CrMo44)	1058 °F / 570 °C
R	1.7380 (10CrMo910)	1112 °F / 600 °C
C	1.4903 (X10CrMoVNb91)	1202 °F / 650 °C
4. Condensate Vessel with connection		
	Please see page 189	
5. Thermal Insulation		
KI	without	
X..	Thickness of insulation in mm (Please advise!)	
6. Piping run at place of installation		
HL	horizontal	
VL	vertical	
7. Process connection		
	Please see page 191	

Order code IBFD-26-HTG

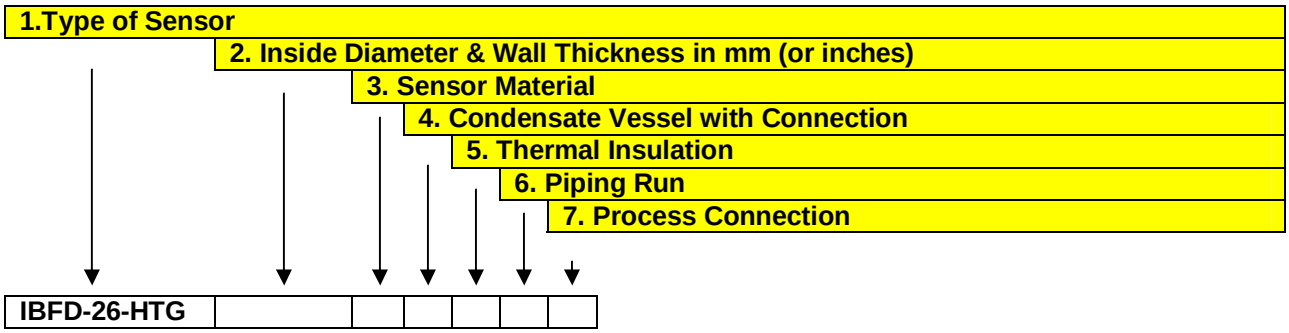

d2) IBFD-36-HTG

1. Type of Sensor		
IBFD-36-HTG	IBFD-36-HTG	
2. Inside Diameter and Wall Thickness		
ID/WT	Inside diameter and wall thickness in mm (or inches), please specify	
3. Sensor Material		
	Material	**Max. Temperature**
P	1.5415 (16Mo3)	986 °F / 530 °C
V	1.7335 (13CrMo44)	1058 °F / 570 °C
R	1.7380 (10CrMo910)	1112 °F / 600 °C
C	1.4903 (X10CrMoVNb91)	1202 °F / 650 °C
4. Condensate Vessel with connection		
	Please see page 189	
5. Thermal Insulation		
KI	without	
X..	Thickness of insulation in mm (Please advise!)	
6. Piping run at place of installation		
HL	horizontal	
VL	vertical	
7. Process connection		
	Please see page 191	

Order code IBFD36-HTG

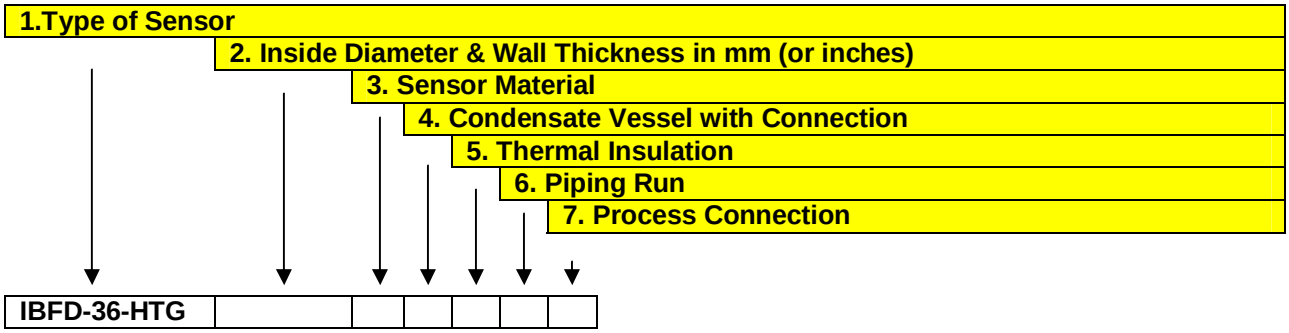

e) Order Specification for Condensate Vessels, Instrument Connection and Shut-Off-Valves for Itabar-Flow-Sensors type IBFD-HT/HTG

e1) Pressure Rating Assembly Flange:

			Operating temperature															
		°F	572	662	752	842	932	950	968	986	1004	1022	1040	1058	1076	1112	1148	1202
		°C	*300*	*350*	*400*	*450*	*500*	*510*	*520*	*530*	*540*	*550*	*560*	*570*	*580*	*600*	*620*	*650*
Code	**Material**	**Pressure Rating**	**Max. operating pressure (psi g)** *Max. operating pressure (bar)*															
C1	C22.8	PN 16 / 150 lbs	138 *9,5*	87 *6*	87 *6*	72.5 *5*												
S1	1.4571		167 *11,5*	159.5 *11*	159.5 *11*	145 *10*												
P1	1.5415		159.5 *11*	145 *10*	138 *9,5*	130.5 *9*	116 *8*											
R1	1.7335		174 *12*	159.5 *11*	145 *10*	138 *9,5*	138 *9,5*	116 *8*	101.5 *7*	87 *6*	72.5 *5*	58 *4*						
C2	C22.8	PN 40 / 150 lbs	348 *24*	145 *10*														
S2	1.4571		406 *28*	377 *26*	362.5 *25*	348 *24*												
P2	1.5415		391.5 *27*	362.5 *25*	333.5 *23*	319 *22*	304.5 *21*											
R2	1.7335		435 *30*	391.5 *27*	377 *26*	348 *24*	348 *24*	290 *20*	246.5 *17*	217.5 *15*	188.5 *13*	145 *10*						
C3	C22.8	PN63 / 300 lbs	345 *24*	145 *10*														
S3	1.4571		406 *28*	377 *26*	362.5 *25*	348 *24*												
P3	1.5415		391.5 *27*	362.5 *25*	333.5 *23*	319 *22*	304.5 *21*											
R3	1.7335		435 *30*	391.5 *27*	377 *26*	348 *24*	348 *24*	290 *20*	246.5 *17*	217.5 *15*	188.5 *13*	145 *10*						
V3	1.7380		493 *34*	449.5 *31*	435 *30*	406 *28*	406 *28*	348 *24*	319 *22*	275.5 *19*	261 *18*	217.5 *15*	174 *12*					
Q3	1.4903		551 *38*	507.5 *35*	493 *34*	493 *34*	478.5 *33*	420.5 *29*	391.5 *27*	348 *24*	333.5 *23*	275.5 *19*	246.5 *17*					
C4	C22.8	PN100 / 600 lbs	870 *60*	798 *55*														
S4	1.4571		1001 *69*	957 *66*	928 *64*	870 *60*												
P4	1.5415		957 *66*	914 *63*	856 *59*	827 *57*	798 *55*											
R4	1.7335		1059 *73*	986 *68*	928 *64*	885 *61*	856 *59*	725 *50*	638 *44*	537 *37*	450 *31*	377 *26*						
V4	1.7380		1117 *77*	1044 *72*	986 *68*	942 *65*	928 *64*	798 *55*	711 *49*	594.5 *41*	508 *35*	435 *30*	406 *28*					
Q4	1.4903		1175 *81*	1088 *75*	1044 *72*	1001 *69*	986 *68*	856 *59*	783 *54*	667 *46*	566 *39*	508 *35*	479 *33*					
C5	C22.8	PN160 / 1500 lbs	1392 *96*	1305 *90*														
S5	1.4571		1595 *110*	1523 *105*	1378 *95*	1363 *94*												
P5	1.5415		1537 *106*	1450 *100*	1363 *94*	1320 *91*	1276 *88*											
R5	1.7335		1682 *116*	1566 *108*	1494 *103*	1407 *97*	1363 *94*	1160 *80*	1015 *70*	870 *60*	725 *50*	595 *41*						
V5	1.7380		1769 *122*	1653 *114*	1581 *109*	1508 *104*	1465 *101*	1247 *86*	1102 *76*	957 *66*	812 *56*	682 *47*	653 *45*					
Q5	1.4903		1847 *126*	1740 *120*	1668 *115*	1595 *110*	1552 *107*	1465 *101*	1175 *81*	1044 *72*	899 *62*	769 *53*	740 *51*					
C6	C22.8	PN250 / 1500 lbs	2785 *192*	2031 *140*														
S6	1.4571		3060 *211*	2393 *165*	2321 *160*	2176 *150*												
P6	1.5415		3089 *213*	2277 *157*	2147 *148*	2074 *143*	2002 *138*											
R6	1.7335		3379 *233*	2466 *170*	2335 *161*	2205 *152*	2147 *148*	1740 *120*	1392 *96*	1247 *86*	1088 *75*	928 *64*						
V6	1.7380		3423 *236*	2582 *178*	2466 *170*	2350 *162*	2219 *153*	1755 *121*	1421 *98*	1291 *89*	1131 *78*	986 *68*	856 *59*	769 *53*				
Q6	1.4903		3510 *242*	2669 *184*	2553 *176*	2437 *168*	2306 *159*	1856 *128*	1537 *106*	1407 *97*	1233 *85*	1073 *74*	943 *65*	856 *59*				
C7	C22.8	PN320 / 1500 lbs	2785 *192*	2611 *180*														
S7	1.4571		3060 *211*	3046 *210*	2901 *200*	2640 *182*												
P7	1.5415		3089 *213*	2915 *201*	2741 *189*	2654 *183*	2567 *177*											
R7	1.7335		3379 *233*	3147 *217*	2988 *206*	2828 *195*	2756 *190*	2147 *148*	1740 *120*	1537 *106*	1378 *95*	1189 *82*						
V7	1.7380		3539 *244*	3307 *228*	3162 *218*	3017 *208*	2843 *196*	2234 *154*	1827 *126*	1653 *114*	1450 *100*	1276 *88*	1102 *76*	986 *68*				
Q7	1.4903		3640 *251*	3394 *234*	3249 *224*	3104 *214*	2930 *202*	2335 *161*	1929 *133*	1755 *121*	1552 *107*	1378 *95*	1189 *82*	1088 *75*				
R8	1.7335	PN400 / 2500 lbs	4395 *303*	4105 *283*	3931 *271*	3742 *258*	3466 *239*	2756 *190*	2147 *148*	1973 *136*	1668 *115*	1523 *105*						
V8	1.7380		4424 *305*	4134 *285*	3945 *272*	3771 *260*	3553 *245*	2828 *195*	2277 *157*	2060 *142*	1813 *125*	1595 *110*	1378 *95*	1233 *85*				
Q8	1.4903		4525 *312*	4235 *292*	4047 *279*	3873 *267*	3655 *252*	2930 *202*	2379 *164*	2161 *149*	1915 *132*	1697 *117*	1479 *102*	1334 *92*	1233 *85*	1160 *80*	1030 *71*	870 *60*

e2) Combination Condensate Pots / Shut-Off Valves

Basically it is possible to use a combination of condensate pots and shut-off valves for sensor types IBFD-/IBFD21 and IBFD –25/26. Such combinations are welded directly onto the sensor head. Preferably such a construction is used in applications with high differential pressures.

Advantages are:

- low weight
- smaller dimensions
- quick local installation

Schematic drawing	Description	Material	Code	Max. Operating Data	
				p PSI (bar)	At T (°F) (°C)
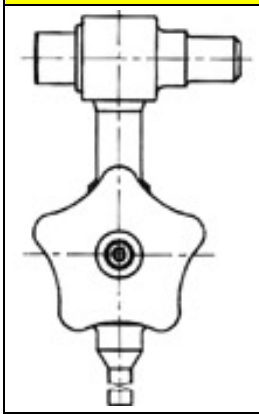	Combination of condensate pot and shut-off valve process connection: welding boss 21 mm with graphite packing	15 Mo 3 (1.5415)	KV02	3675 (250)	248 (120)
				1764 (121)	932 (500)
		13 CrMo 4 4 (1.7335)	KV03	3675 (250)	248 (120)
				1837 (129)	1022 (550)
		10 CrMo 910 (1.7380)	KV04	1160 (80)	1742 (530)

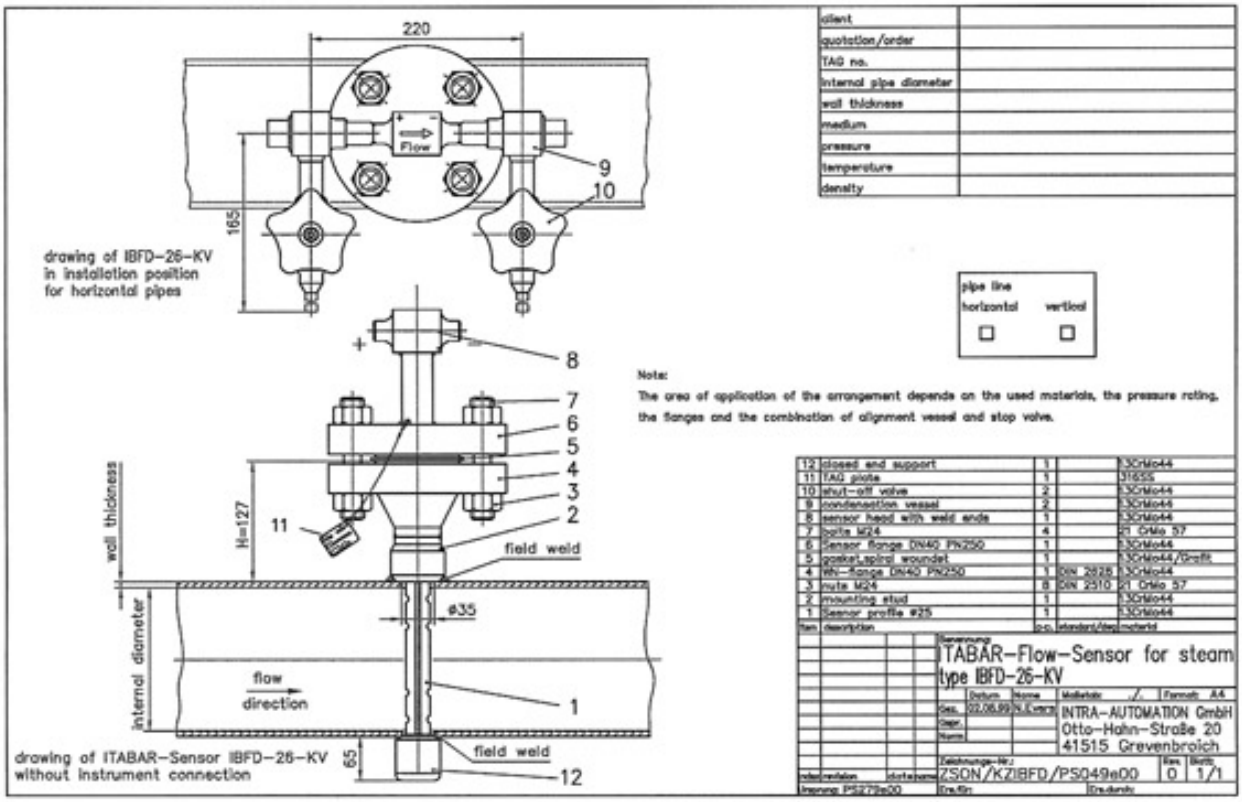

e3) Design Data Condensate Vessel

One important requirement for a trouble-free functioning of the ITABAR steam sensors is that the transition process from steam to condensate only takes place inside the condensate pots designed for this purpose. With this in mind different style condensate pots are offered for various operating conditions.

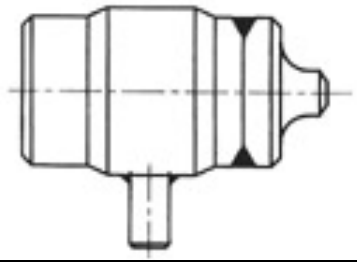

Fig 60: Condensate pots, Dimensions ∅ 3.54 x 0.69 inches (90 x 17,5 mm) with weld sockets 0.84 inches (21,3 mm)

The following table provides the pressure rating of the condensate pots

Material st steel	Wall thickness	Operating temperature (°F)															
		Max Operating pressure / PSI															
	mm	572	662	752	842	932	950	968	986	1004	1022	1040	1058	1076	1112	1148	1202
1.5415	4	1705	1499	1411	1323	1278	1264	1264									
1.7335	4	1911	1793	1675	1587	1528	1514	1514	1499	1484	1470	1176	1029				
1.7335	12,5				7350	6409	5350	4233	3454	2778	2175	1778	1440				
1.7380	15				7350	6556	5733	4968	4307	3719	3160	2734	2352	2013	1749		
1.4903	15																

e4) Pressure-Temperature Table for Shut-Off-Valves

Code	Description	Pressure Psi	Housing material Abbr. name / DIN		Connections Inches	Packing	Used for
A13	Shut-off valves	5802 (PN400)	15 Mo 3	1.5415	0.85 x 0.13	graphite	IBFD-HT, IBFD-HTG
A14		5802 (PN400)	13 CrMo 4 4	1.7335	0.85 x 0.13	graphite	
A15		5802 (PN400)	10 CrMo 9 10	1.7380	0.85 x 0.13	graphite	
A16	Shut-off valve (component pest to TRD 110, TRB 801 Nr. 45)	4641 (PN320)	15 Mo 3	1.5415	0.85 x 0.13	graphite	IBFD-HT, IBFD-HTG
A17		4641 (PN320)	13 CrMo 44	1.7335	0.85 x 0.13	graphite	
A18		4641 (PN320)	10 CrMo 9 10	1.7380	0.85 x 0.13	graphite	
A19		5802 (PN400)	15 Mo 3	1.5415	1.06 x 0.2	graphite	
A20		5802 (PN400)	13 CrMo 44	1.7335	1.06 x 0.2	graphite	
A21		5802 (PN400)	10 CrMo 9 10	1.7380	1.06 x 0.2	graphite	
A22		5802 (PN400)	X10 CrMoVNb9-1	1.4903	1.06 x 0.2	graphite	

Code	Maximum operating pressure (PSI / *bar*) at operating temperature °F (°C)																
	302 (150)	392 (200)	482 (250)	572 (300)	662 (350)	752 (400)	797 (425)	842 (450)	887 (475)	932 (500)	950 (510)	968 (520)	986 (530)	1004 (540)	1022 (550)	1040 (560)	1058 (570)
A13	5352 *369*	4917 *339*	4467 *308*	4032 *278*	3582 *247*	3147 *217*	2930 *202*	2698 *186*	2480 *171*	2248 *155*	2161 *149*	2074 *143*	1987 *137*	1900 *131*	1813 *125*	-	-
A14	5352 *369*	4917 *339*	4467 *308*	4032 *278*	3582 *247*	3147 *217*	2930 *202*	2698 *186*	2480 *171*	2248 *155*	2161 *149*	2074 *143*	1987 *137*	1900 *131*	1813 *125*	-	-
A15	5802 *400*	5802 *400*	5802 *400*	5802 *400*	5439 *375*	5076 *350*	4714 *325*	4351 *300*	3989 *275*	3626 *250*	3481 *240*	3336 *230*	3191 *220*	3046 *210*	2901 *200*	-	-

Code	Maximum operating pressure (PSI / *bar*) at operating temperature °F (°C)																					
	572 (300)	662 (350)	752 (400)	797 (425)	842 (450)	887 (475)	932 (500)	950 (510)	968 (520)	986 (530)	1004 (540)	1022 (550)	1040 (560)	1058 (570)	1076 (580)	1094 (590)	1112 (600)	1130 (610)	1148 (620)	1166 (630)	1184 (640)	1202 (650)
A16	4641	4612	4322	4250	4177	4105	2596	1973	1552	1247												
	320	*318*	*298*	*293*	*288*	*2836*	*179*	*136*	*107*	*86*												
A17	4641	4641	4641	4641	4641	4569	3974	3321	2625	2147	1726	1349										
	320	*320*	*320*	*320*	*320*	*315*	*274*	*229*	*181*	*148*	*119*	*93*										
A18	4641	4641	4641	4641	4641	4641	4148	3626	3147	2727	2350	2002	2002	1479	1276							
	320	*320*	*320*	*320*	*320*	*320*	*286*	*250*	*217*	*188*	*162*	*138*	*138*	*102*	*88*							
A19	5569	5105	4670	4670	4670	4583	3989	3350	2669	2045												
	384	*352*	*322*	*322*	*322*	*316*	*275*	*231*	*184*	*141*												
A20	7252	6527	6251	6019	5802	5700	4757	3800	2799	2074	1305	769										
	500	*450*	*431*	*415*	*400*	*393*	*328*	*262*	*193*	*143*	*90*	*53*										
A21	7252	6527	6527	6527	6469	6251	6106	5337	4656	4076	3524	3075	2625	2306	1987							
	500	*450*	*450*	*450*	*446*	*431*	*421*	*368*	*321*	*281*	*243*	*212*	*181*	*159*	*137*							
A22	7252	6527	6527	6527	6527	6527	6527	6527	6527	6527	6527	5889	5120	4438	3756	3161	2625	2074	1624	1175	856	537
	500	450	450	450	450	450	450	450	450	450	450	406	353	306	259	218	181	143	112	81	59	37

Fig 61:
Design of Shut-off-valves

Materials:
16Mo3
13CrMo44
10CrMo910

Fig 62:
Design of Shut-off-valves

Materials:
16Mo3
13CrMo44
10CrMo910
X10CrMoVNb9-1

e5) Order Specifications

Condensate Vessels for IBFD-HT/HTG-26/36			
Condensate vessel		Material Short name	Material no. DIN/ANSI
K0	without		
K5	with welding stud 21,3 mm size: ∅ 90x17,5 mm	16Mo3	1.5415 / A335 Gr. P1
K6	with welding stud 21,3 mm size: ∅ 90x17,5 mm	13CrMo44	1.7335 / A335 Gr. P11
K7	with welding stud 21,3 mm size: ∅ 90x17,5 mm	10CrMo910	1.7380 / A335 Gr. P22
K8	with welding stud 21,3 mm size: ∅ 90x17,5 mm	X10CrMoVNb91	1.4903* / A335 Gr. P91

*do not weld together with 1.7335

The material of the condensate vessel should correspond with the material of the stop valve.

Shut-Off Device for Impulse Pipes for IBFD-HT/HTG-26/36					
Type of Shut-Off-Device		Material Short name	Material DIN/ANSI	Connection	Packing
A00	without shut-off valve				
A13	shut-off valve, PN400	16Mo3	1.5415 A335GP1	21,3x3,2mm	Graphite
A14	shut-off valve, PN400	13CrMo44	1.7335 A335GP11	21,3x3,2mm	Graphite
A15	shut-off valve, PN400	10CrMo910	1.7380 A335GP22	21,3x3,2mm	Graphite

High-Pressure Shut-Off Valve acc. TÜV for IBFD-HT/HTG-26/36					
A16	Shut-Off Valve, PN320 TRD 110, TRB 801 No. 45	16Mo3	1.5415 A335GP1	21,3x3,2mm	Graphite
A17	Shut-Off Valve, PN320 TRD 110, TRB 801 No. 45	13CrMo44	1.7335 A335GP11	21,3x3,2mm	Graphite
A18	Shut-Off Valve, PN320 TRD 110, TRB 801 No. 45	10CrMo910	1.7380 A335GP22	21,3x3,2mm	Graphite
A19	Shut-Off Valve, PN500 TRD 110, TRB 801 No. 45	16Mo3	1.5415 A335GP1	21,3x3,2mm	Graphite
A20	Shut-Off Valve, PN500 TRD 110, TRB 801 No. 45	13CrMo44	1.7335 A335GP11	21,3x3,2mm	Graphite
A21	Shut-Off Valve, PN500 TRD 110, TRB 801 No. 45	10CrMo910	1.7380 A335GP22	21,3x3,2mm	Graphite
A22	Shut-Off Valve, PN500 TRD 110, TRB 801 No. 45	X10CrMoVNb91	1.4903 A335GP91	21,3x3,2mm	Graphite

If double stop valves are required, please add to quote, e.g. A13-A13.

Combination Condensate Vessel and Shut-Off Valve for IBF-HT/HTG-26/36				
Shut-Off Device for Impulse Pipes		Material Short Name	Material DIN/ANSI	Packing
KV02	Condensate vessel and shut-off valve as welded unit, welding stud 21,3 mm	16Mo3	1.5415 A335GP1	Graphite
KV03	Condensate vessel and shut-off valve as welded unit, welding stud 21,3 mm	13CrMo44	1.7335 A335GP11	Graphite
KV04	Condensate vessel and shut-off valve as welded unit, welding stud 21,3 mm	10CrMo910	1.7380 A335GP22	Graphite

C.3	**Itabar®-Flow-Sensors for Steam (FloTap-Version) (Installation under Pressure)**
C.3.1	**Itabar®-Flow-Sensors (FloTap-Version with Threaded Process Connection and Guide-Rod-Spindles) Types: FTMD-20/21/25/26/35/36 (up to 232 psi [16 bar])**

a) Description

The ITABAR-Sensor series FTMD is designed to measure volumetric flow of saturated steam up to an operating pressure of pmax= 235 psi (16 bar) and a operating temperature of Tmax= 572 °F (300 °C). The sensor construction features a welding boss between the pipe and the sensor-related parts, a compression fitting to seal the sensor and a gate valve to insert the sensor profile into the pipe. The insertion or removal of the sensor is made easy by two guide-rod spindles or (as an option) via a hand wheel driven gearbox.

Fig 63: Itabar-Flow-Sensor type FTMD-36 in vertical installation for vertical or horizontal pipe runs.

Fig 64: Itabar-Flow-Sensor type FTMD-36 made or stainless steel for pipe size ID = 336,5 mm

b) Drawings for FTMD

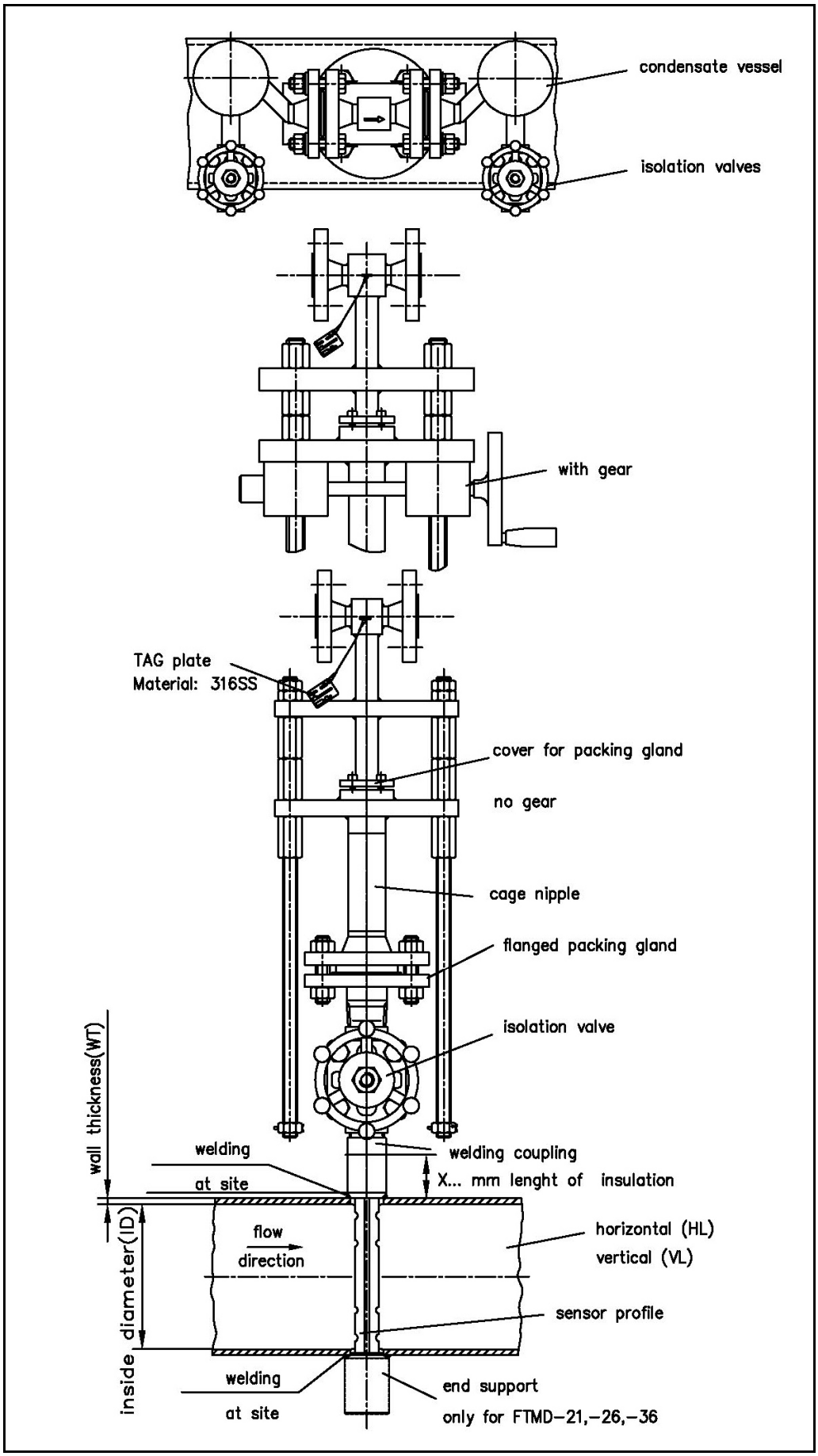

c.) Order Data for Itabar® Series FTMD-20/21/25/26/35/36

c.1) Sensor type:

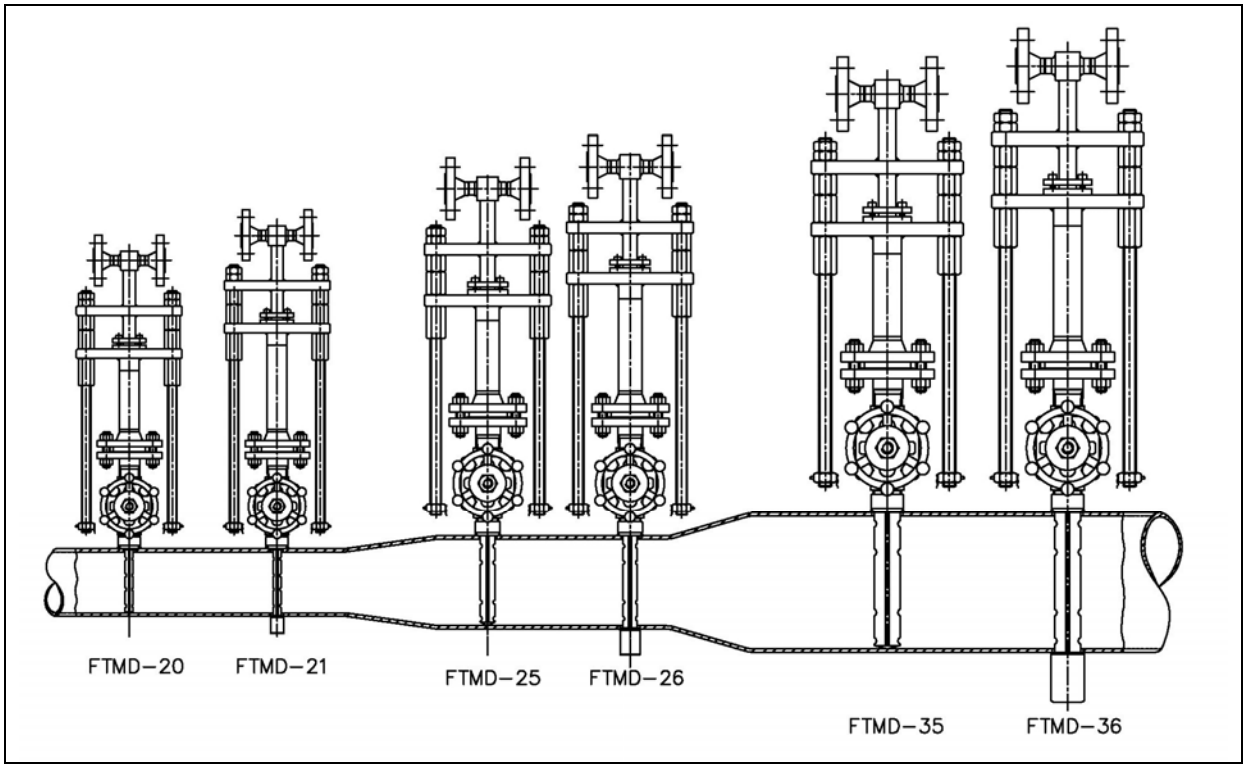

Pipe Size DN	Pipe size (inches)	Maximum allowable volumetric flow in m³/h					
		Sensor type					
		FTMD -20	FTMD -21	FTMD -25	FTMD -26	FTMD -35	FTMD -36
DN 40	1 1/2	40	114	---	---	---	---
DN 50	2	59	161	---	---	---	---
DN 65	2 1/4	93	243	---	---	---	---
DN 80	3	130	328	---	---	---	---
DN 100	4	179	439	205	544	---	---
DN 125	5	---	---	281	719	---	---
DN 150	6	---	---	358	894	---	---
DN 200	8	---	---	515	1242	---	---
DN 250	10	---	---	687	1623	---	---
DN 300	12	---	---	872	2034	1757	4204
DN 350	14	---	---	1053	2433	2142	5067
DN 400	16	---	---	1226	2828	2532	5938
DN 500	20	---	---	1592	3627	3283	7611
DN 600	24	---	---	1949	4423	4052	9327
DN 700	28	---	---	2318	5237	4851	11106
DN 800	32	---	---	2704	6099	5667	12930
DN 900	36	---	---	---	7000	---	14790
DN 1000	40	---	---	---	7921	---	16614
DN 1200	48	---	---	---	9763	---	20450

These values are valid for water with a density of ρ = 0,9982 kg/l and a temperature T = 68 °F (20 °C). To calculate volumetric flow or mass flow for fluids of another density ρ_1 see chapter 6 „Specifications of pitot tubes with WINFLOW“.

d.) Order Specification Itabar-Flow-Sensors, Series FTMD

d1) FTMD-20/21

1. Type of Sensor		
FTMD-20	without end support	
FTMD-21	with end support	
2. Inside Diameter and Wall Thickness		
ID/WT	Inside diameter and wall thickness in mm (or inches), please specify	
3. Sensor Material		
S	316Ti (1.4571)	
4. Welding Coupling		
0	without	
1	C.S.	
2	316Ti (1.4571)	
5. End Support (only FTMD-21)		
0	without	
C	C.S.	
S	316Ti (1.4571)	
6. Isolation Valve for the Sensor Profile		
AS1	gate valve 1”, mat. CS	PN 16 / 150 lbs
AS2	gate valve 1”, mat. A182-F316/316 (1.4401)	PN 16 / 150 lbs
7. Flanged Packing Gland		
S	316Ti (1.4571)	
8. Cage Nipple		
PC	C.S.	
PS	316Ti (1.4571)	
9. Packing Material for the Flanged and Welded Packing Gland		
2	Graphite, max. 400 °C	
10. Condensate Vessel		
	See page no. 199	
11. Thermal Insulation		
KI	without	
X..	thermal insulation thickness in inches (or mm), please specify	
12. Piping Run at Place of Installation		
HL	horizontal pipe run	
VL	vertical pipe run	
13. Gear Box		
0	without gearbox	
1	with gearbox, mat.: die-cast aluminium	
2	with gearbox, mat.: stainless steel	
13. Process Connection		
	See page no. 201	

Order key for FTMD-20/21

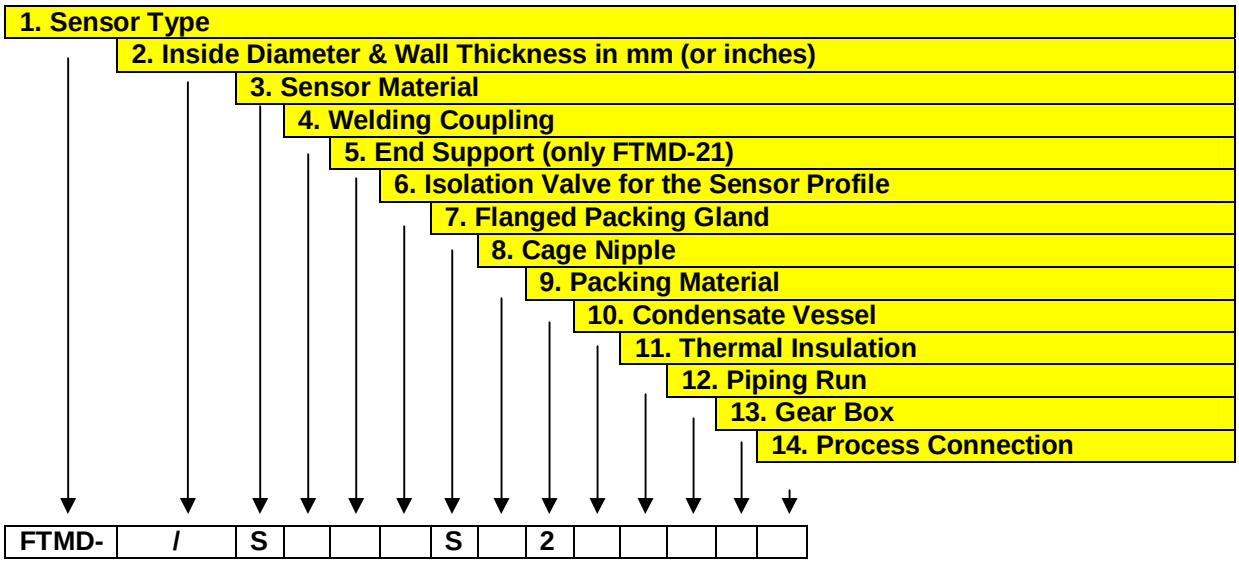

d2) FTMD-25/26

1. Type of Sensor		
FTMD-25	without end support	
FTMD-26	with end support	
2. Inside Diameter and Wall Thickness		
ID/WT	Inside diameter and wall thickness in mm (or inches), please specify	
3. Sensor Material		
S	316Ti (1.4571)	
4. Welding Coupling		
0	without	
1	C.S.	
2	316Ti (1.4571)	
5. End Support (only FTMD-26)		
0	without	
C	C.S.	
S	316Ti (1.4571)	
6. Isolation Valve for the Sensor Profile		
AS3	gate valve 1 ½", mat. CS	PN 16 / 150 lbs
AS4	gate valve 1 ½", mat. A182-F316/316 (1.4401)	PN 16 / 150 lbs
7. Flanged Packing Gland		
S	316Ti (1.4571)	
8. Cage Nipple		
PC	C.S.	
PS	316Ti (1.4571)	
9. Packing Material for the Flanged and Welded Packing Gland		
2	Graphite, max. 400 °C	
10. Condensate Vessel		
	See page no. 199	
11. Thermal Insulation		
KI	without	
X..	thermal insulation thickness in inches (or mm), please specify	
12. Piping Run at Place of Installation		
HL	horizontal pipe run	
VL	vertical pipe run	
13. Gear Box		
0	without gearbox	
1	with gearbox, mat.: die-cast aluminium	
2	with gearbox, mat.: stainless steel	
14. Integrated PT-100 RTD		
T0	without	
TA	3-wire	
TB	2-wire, with Ex-approval	
15. Head Transmitter for RTD		
	See page no. 45	
16. Process Connection		
	See page no. 201	

Order key for FTMD-25/26

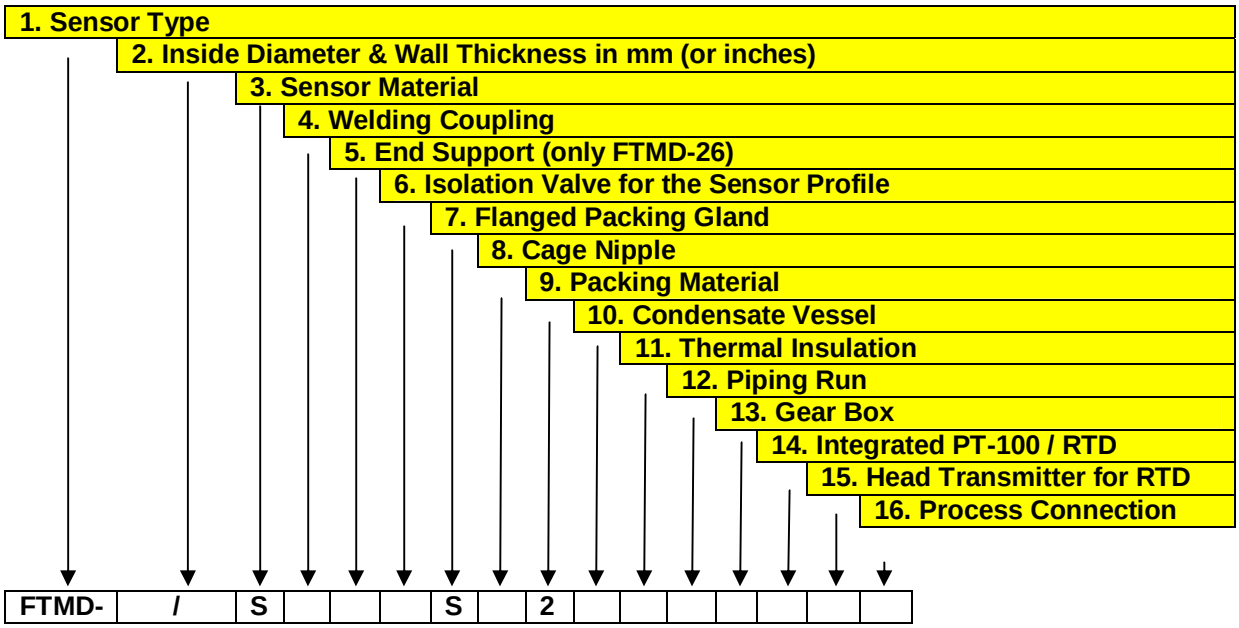

d3) FTMD-35/36

1. Type of Sensor		
FTMD-35	without end support	
FTMD-36	with end support	
2. Inside Diameter and Wall Thickness		
ID/WT	Inside diameter and wall thickness in mm (or inches), please specify	
3. Sensor Material		
S	316Ti (1.4571)	
4. Welding Coupling		
0	without	
1	C.S.	
2	316Ti (1.4571)	
5. End Support (only FTMD-36)		
0	without	
C	C.S.	
S	316Ti (1.4571)	
6. Isolation Valve for the Sensor Profile		
AS5	gate valve 2”, mat. CS	PN 16 / 150 lbs
AS6	gate valve 2”, mat. A182-F316/316 (1.4401)	PN 16 / 150 lbs
7. Flanged Packing Gland		
S	316Ti (1.4571)	
8. Cage Nipple		
PC	C.S.	
PS	316Ti (1.4571)	
9. Packing Material for the Flanged and Welded Packing Gland		
2	Graphite, max. 400 °C	
10. Condensate Vessel		
	See page no. 199	
11. Thermal Insulation		
KI	without	
X..	thermal insulation thickness in inches (or mm), please specify	
12. Piping Run at Place of Installation		
HL	horizontal pipe run	
VL	vertical pipe run	
13. Gear Box		
0	without gearbox	
1	with gearbox, mat.: die-cast aluminium	
2	with gearbox, mat.: stainless steel	
14. Integrated PT-100 RTD		
T0	without	
TA	3-wire	
TB	2-wire, with Ex-approval	
15. Head Transmitter for RTD		
	See page no. 45	
16. Process Connection		
	See page no. 201	

Order key for FTMD-35/36

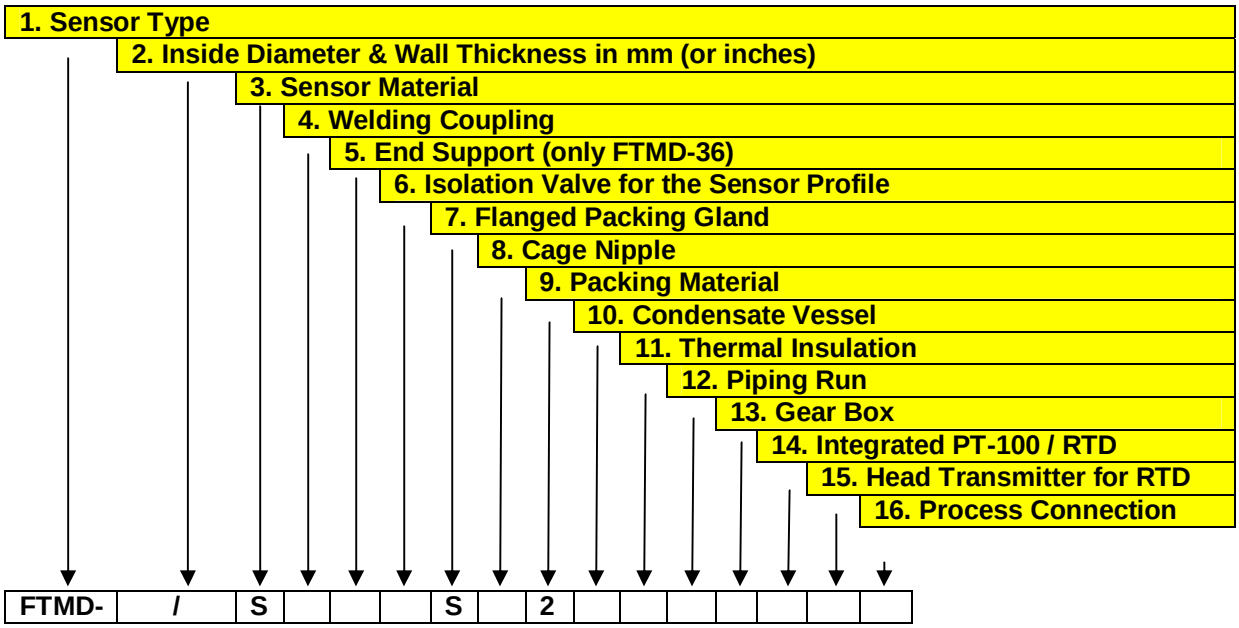

e) Order Specification for Condensate Vessels, Instrument Connection and Shut-Off-Valves for Itabar-Flow-Sensors type FTMD

Flanged Joint at Sensor Head (1 pair)		
K0	without condensate vessels	
K1	condensate vessel, weld sockets 21,3 mm, edge form 21 acc. DIN 2559	
K3	condensate vessel with R ½" screw neck for screwed flange acc. DIN 19207	
K4	condensate vessel with ½"NPT screw neck	
K5	condensate vessel with Ermeto-coupling for 12 mm pipe (DIN 2353)	
Material and Size for Condensate Vessels		
	Material	**Size**
H	A 285 (P 265 GH) "heavy boiler plate HII"	∅ 88,9 x 5 mm
S	316Ti (1.4571)	∅ 88,9 x 5 mm

Shut-off-Device for Impulse Pipe, standard with welded condensate vessel (1 pair)				
	Type	**Nominal Pressure**	**Connection**	**Material**
A00	without shut-off-device			
A81	ANSI gate valve	800 lbs	½" NPT	Housing: A105 (C22) Packing graphite-fiber-glass
A82	ANSI gate valve	800 lbs	½" NPT	Housing: 316L (1.4404) Packing graphite-fiber-glass

Only for compact version:

Flanged Joint at Sensor Head (1 pair)		
A1	condensate vessel with sensor head, impulse pipe and mounting flange directly welded	
Material and Size of Condensate Vessel		
	Material	**Size**
H	A 285 (P 265 GH) "heavy boiler plate HII"	∅ 88,9 x 5 mm
S	316Ti (1.4571)	∅ 88,9 x 5 mm

Connection (only in combination with A1)	
A06	flange plate for 3-way-manifold, material: 316Ti (1.4571)
A15	flange plate for 5-way-manifold, material: 316Ti (1.4571)

Shut-off-Device for Impulse Pipe (only in combination with A1				
	Type	**Nominal Pressure**	**Material**	**Packing**
A00	without shut-off-device			
A66	3-way manifold	PN 400	A182-F316L (1.4401)	Graphite
A71	5-way-manifold	PN 400	A182-F316L (1.4401)	Graphite

C.3.2 Itabar®-Flow-Sensors (FloTap-Version with Flanged Process Connection and Guide-Rod-Spindles) Types: FTHD-20/21/25/26/35/36 (up to 580 psi [PN 40])

a) Description

The ITABAR-sensor series FTHD is designed to measure volumetric flow of saturated and super heated steam. The sensor construction features a flanged connection between the pipe and the sensor-related parts, a compression fitting to seal the sensor and a gate valve to insert the sensor profile into the pipe. The sensor can be used at an operating pressure of up to 588 psi (40 bar) and an operating temperature of up to 752 °F (400°C). The insertion or removal of the sensor is made easy by two guide-rod spindles or (as an option) via a hand wheel driven gearbox.

Fig 65: Itabar-Flow-Sensor type FTHD-36 in a horizontal installation for horizontal or vertical pipe runs.

Fig 66: Itabar-Flow-Sensor type FTHD-36 made of stainless steel for a pipe with ID = 336.5 mm

b) Drawing for FTHD

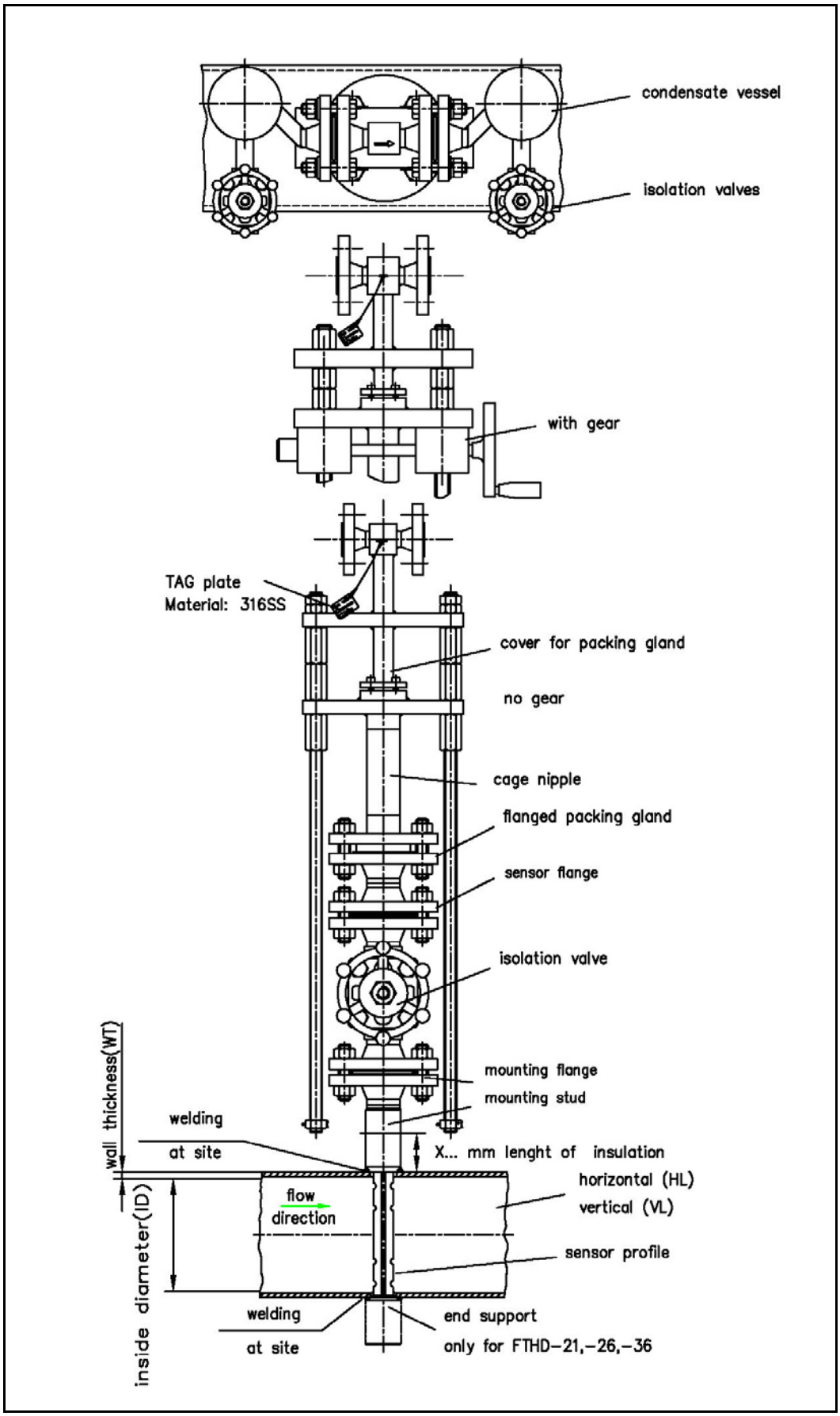

c.) Order Data for Itabar® Series FTHD-20/21/25/26/35/36

c.1) Sensor type:

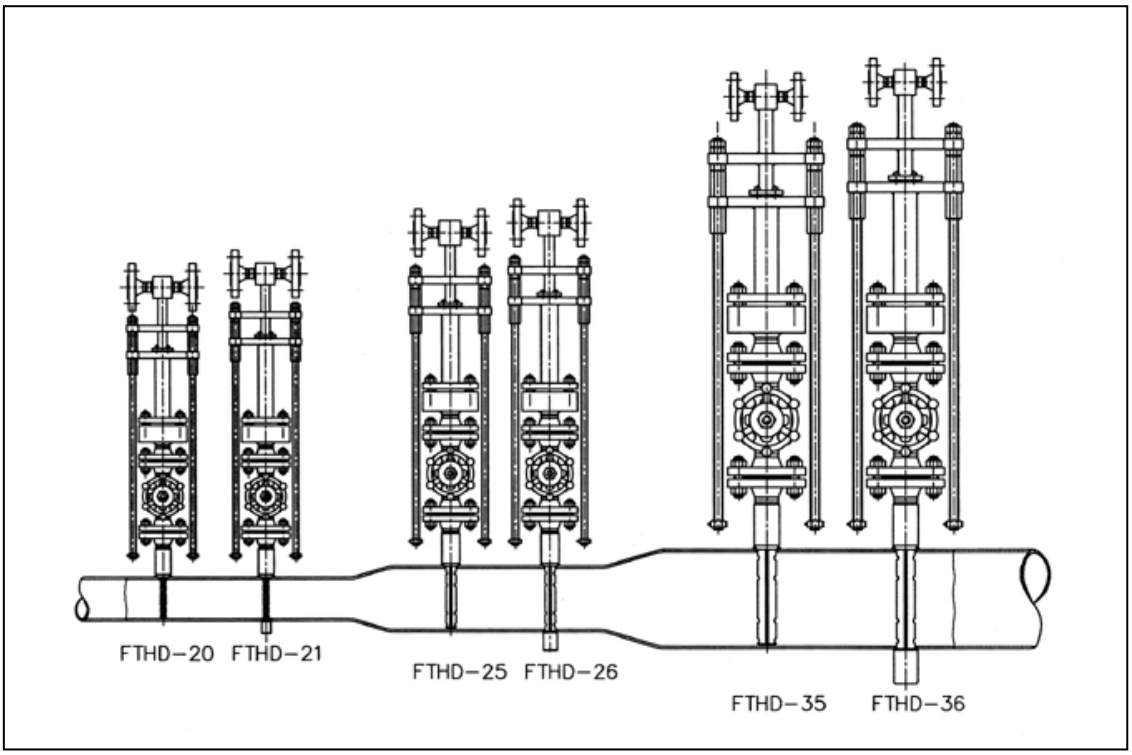

Pipe Size DN	Pipe Size (inches)	Maximum allowable volumetric flow in m³/h Sensor type					
		FTHD -20	FTHD -21	FTHD -25	FTHD -26	FTHD -35	FTHD -36
DN 40	1 1/2	40	114	---	---	---	---
DN 50	2	59	161	---	---	---	---
DN 65	2 1/4	93	243	---	---	---	---
DN 80	3	130	328	---	---	---	---
DN 100	4	179	439	205	544	---	---
DN 125	5	238	570	281	719	---	---
DN 150	6	---	---	358	894	---	---
DN 200	8	---	---	515	1242	---	---
DN 250	10	---	---	687	1623	---	---
DN 300	12	---	---	872	2034	1757	4204
DN 350	14	---	---	1053	2433	2142	5067
DN 400	16	---	---	1226	2828	2532	5938
DN 500	20	---	---	1592	3627	3283	7611
DN 600	24	---	---	1949	4423	4052	9327
DN 700	28	---	---	2318	5237	4851	11106
DN 800	32	---	---	2704	6099	5667	12930
DN 900	36	---	---	---	7000	---	14790
DN 1000	40	---	---	---	7921	---	16614
DN 1200	48	---	---	---	9763	---	20450
DN1400	56	---	---	---	11569	---	24220
1600	64	---	---	---	13315	---	27987
1800	72	---	---	---	15040	---	31613
2000	80	---	---	---	---	---	---

These values are for water of ρ = 0,9982 kg/l SGU and at a temperature T = 20 °C. To calculate volumetric or mass flow of fluids with other densities see chapter 6 „Specifications of DP Sensors with WINFLOW“.

d.) Order Specification Itabar-Flow-Sensors, Series FTHD

d1) FTHD-20/21

1. Type of Sensor			
FTHD-20	without end support		
FTHD-21	with end support		
2. Inside Diameter and Wall Thickness			
ID/WT	Inside diameter and wall thickness in mm (or inches), please specify		
3. Sensor Material			
S	316Ti (1.4571)		
4. Sensor Flange (identical to sensor material)			
SM	acc. DIN		
SA	acc. ANSI		
5. Sensor Flange Surface			
1	acc. DIN		
2	acc. ANSI RF		
3	acc. ANSI RF SF (smooth finish)		
4	RTJ		
6. Sensor Flange Pressure Rating (PN / lbs), Material and Size (DN / inches)			
	Pressure rating	**Material**	**Size**
1	PN 16 / 150 lbs	316Ti (1.4571)	DN 25 / 1”
2	PN 40 / 300 lbs	316Ti (1.4571)	DN 25 / 1”
7. Mounting Stud (material of stud has to be identical / resp. weldable to the pipe material)			
0	without		
R	mounting stud with flange (standard)		
W	weldolet-stud with flange		
8. Mounting Stud Flange (size and pressure rating has to be identical to sensor flange)			
0	Without		
M	acc. DIN, flange face form C		
A	acc. ANSI, flange face RF		
F	acc. ANSI, flange face SF (smooth finish)		
T	acc. ANSI, flange face RTJ		
9. Mounting Stud Flange, Material, Pressure Rating (PN / lbs) and Size (DN / inches)			
	Material	**Pressure rating**	**Size**
0	without		
C1	C.S.	PN 16 / 150 lbs	DN 25 / 1”
S1	316Ti – standard –	PN 16 / 150 lbs	DN 25 / 1”
C2	C.S.	PN 40 / 300 lbs	DN 25 / 1”
S2	316Ti – standard –	PN 40 / 300 lbs	DN 25 / 1”
10. End support (only FTHD-21)			
0	without		
C	CS		
S	316Ti (1.4571)		
11. Isolation Valve for Sensor Profile			
	See page no. 205		
12. Flanged Packing Gland			
S	316Ti (1.4571)		
13. Cage Nipple Material			
PC	C.S. – standard –		
PS	316Ti (1.4571)		
14. Packing Material			
1	PTFE, up to 392 °F (200 °C)		
2	Graphite up to 752 °F (400 °C)		
15. Gear Box			
0	without gear box		
1	with gear box, mat. die-cast aluminium		
2	with gear box, mat. stainless steel		

Continued next page

Code	Description
16. Condensate Vessel	
	See page no. 214
17. Thermal Insulation	
KI	without
X..	with thermal insulation, please advise thickness in mm (or inches)
18. Piping Run at Place of Installation	
HL	horizontal
VL	vertical
19. Shut-off Device	
	See page no. 214

Order key for FTHD-20/21

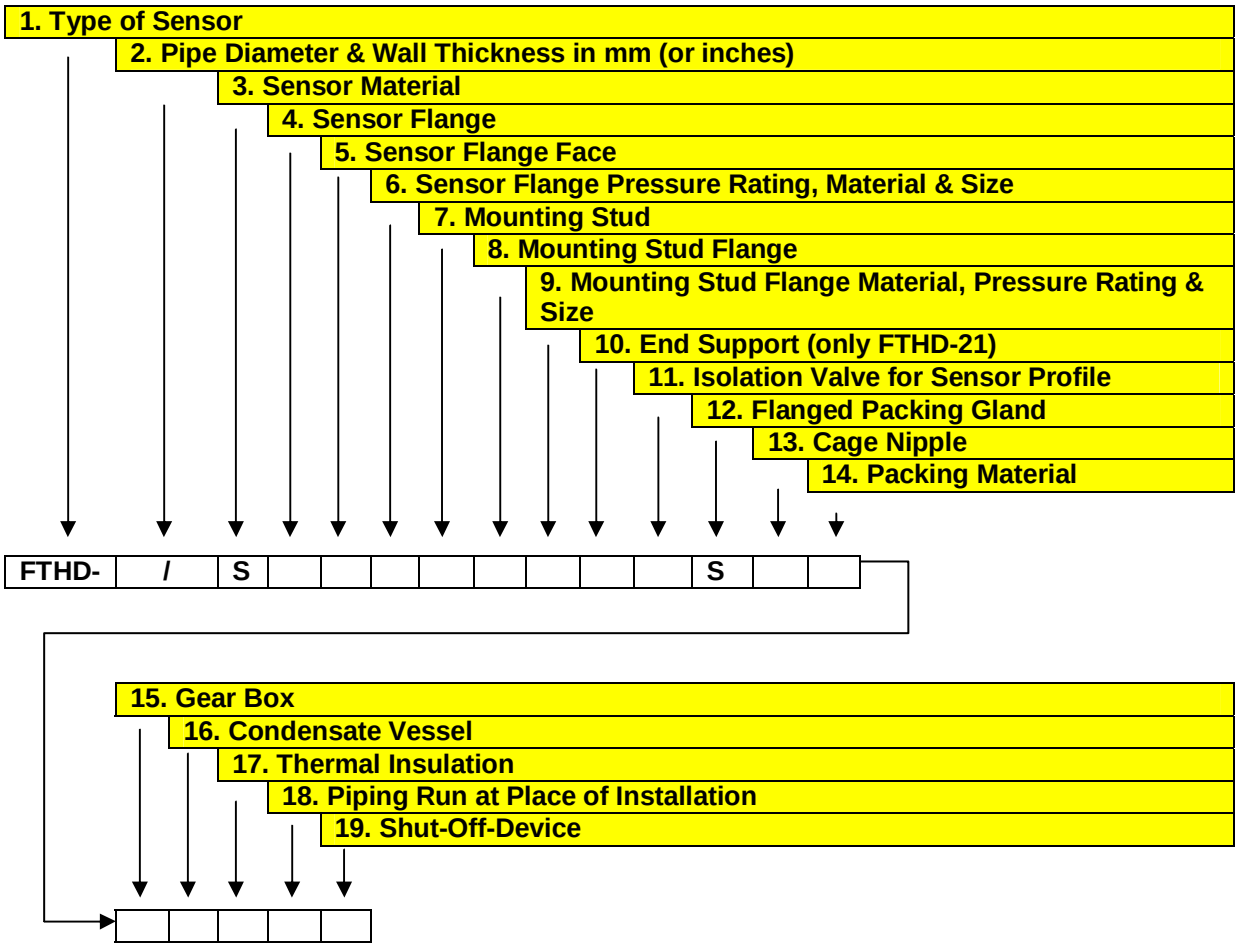

d1.1) Isolation Valve for the Sensor Profile, type FTHD-20/21

Code	Description		
Isolation Valve for Sensor Profile, acc. to DIN			
	Type	**Size / Pressure rating**	**Material**
MF01	ball valve	DN 25 / PN 16	C.S
MF02	ball valve	DN 25 / PN 16	A182-F316H
MF03	ball valve	DN 25 / PN 40	C.S
MF04	ball valve	DN 25 / PN 40	A182-F316H
MS01	gate valve	DN 25 / PN 100	C.S
MS02	gate valve	DN 25 / PN 100	A182-F316H

Code	Description		
Isolation Valve for Sensor Profile, acc. to ANSI			
	Type	**Size / Pressure rating**	**Material**
AF01	ball valve	1” 150 lbs	C.S
AF02	ball valve	1” 150 lbs	A182-F316H
AF03	ball valve	1” 300 lbs	C.S
AF04	ball valve	1” 300 lbs	A182-F316H
AS01	gate valve	1” 600 lbs	C.S
AS02	gate valve	1” 600 lbs	A182-F316H

d2) FTHD-25/26

1. Type of Sensor			
FTHD-25	without end support		
FTHD-26	with end support		
2. Inside Diameter and Wall Thickness			
ID/WT	Inside diameter and wall thickness in mm (or inches), please specify		
3. Sensor Material			
S	316Ti (1.4571)		
4. Sensor Flange (identical to sensor material)			
SM	acc. DIN		
SA	acc. ANSI		
5. Sensor Flange Surface			
1	acc. DIN		
2	acc. ANSI RF		
3	acc. ANSI RF SF (smooth finish		
4	RTJ		
6. Sensor Flange Pressure Rating (PN / lbs), Material and Size (DN / inches)			
	Pressure rating	**Material**	**Size**
B01	PN 16 / 150 lbs	316Ti (1.4571)	DN 32 / 1 ½”
B02	PN 40 / 300 lbs	316Ti (1.4571)	DN 32 / 1 ½”
7. Mounting Stud (material of stud has to be identical / resp. weldable to the pipe material)			
0	without		
R	mounting stud with flange (standard)		
W	weldolet-stud with flange		
8. Mounting Stud Flange (size and pressure rating has to be identical to sensor flange)			
0	without		
M	acc. DIN, flange face form C		
A	acc. ANSI, flange face RF		
F	acc. ANSI, flange face SF (smooth finish)		
T	acc. ANSI, flange face RTJ		
9. Mounting Stud Flange, Material, Pressure Rating (PN / lbs) and Size (DN / inches)			
	Material	**Pressure rating**	**Size**
0	without		
C1	C.S.	PN 16 / 150 lbs	DN 32 / 1 ½”
S1	316Ti	PN 16 / 150 lbs	DN 32 / 1 ½”
C2	C.S.	PN 40 / 300 lbs	DN 32 / 1 ½”
S2	316Ti	PN 40 / 300 lbs	DN 32 / 1 ½”
10. End support (only FTHD-26)			
0	without		
C	C.S.		
S	316Ti (1.4571)		
11. Isolation Valve for Sensor Profile			
	See page no. 208		
12. Flanged Packing Gland			
S	316Ti (1.4571)		
13. Cage Nipple Material			
PC	C.S.		
PS	316Ti (1.4571)		
14. Packing Material			
1	PTFE, up to 392 °F (200 °C)		
2	Graphite up to 752 °F (400 °C)		
15. Gear Box			
0	without gear box		
1	with gear box, mat. die-cast aluminium		
2	with gear box, mat. stainless steel		

Continued next page

Code	Description
16. Thermal Insulation	
KI	without
X..	with thermal insulation, please advise thickness in mm (or inches)
17. Condensate Vessel	
	See page no. 214
18. Piping Run at Place of Installation	
HL	horizontal
VL	vertical
19. Integrated PT-100 RTD	
T0	without
TA	3-wire
TB	3-wire, with Ex-approval
20. Head Transmitter for RTD	
	See page no. 45
21. Shut-off-Device	
	See page no. 214

Order key for FTH-25/26

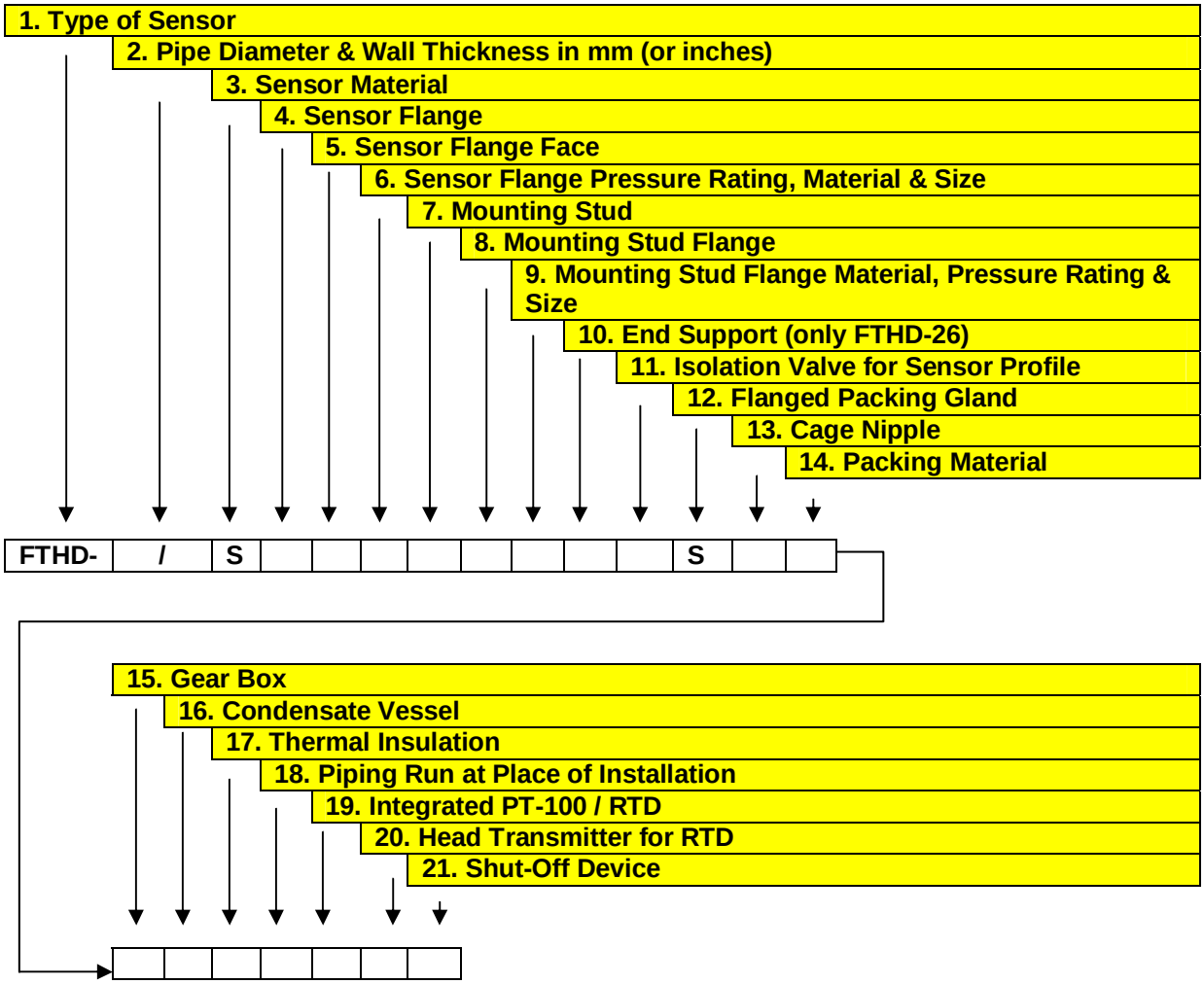

d2.1) Isolation Valve for the Sensor Profile, type FTHD-25/26

Code	Description		
Isolation Valve for Sensor Profile, acc. to DIN			
	Type	**Size / Pressure rating**	**Material**
MF08	ball valve	DN 32 / PN 16	C.S
MF09	ball valve	DN 32 / PN 16	A182-F316H
MF13	ball valve	DN 32 / PN 40	C.S
MF14	ball valve	DN 32 / PN 40	A182-F316H
MF18	ball valve	DN 40 / PN 63	C.S
MF19	ball valve	DN 40 / PN 63	A182-F316H
MS11	gate valve	DN 40 / PN 100	C.S
MS12	gate valve	DN 40 / PN 100	A182-F316H

Code	Description		
Isolation Valve for Sensor Profile, acc. to ANSI			
	Type	**Size / Pressure rating**	**Material**
AF08	ball valve	1 ½” 150 lbs	C.S
AF09	ball valve	1 ½” 150 lbs	A182-F316H
AF13	ball valve	1 ½” 300 lbs	C.S
AF14	ball valve	1 ½” 300 lbs	A182-F316H
AS11	gate valve	1 ½” 600 lbs	C.S
AS12	gate valve	1 ½” 600 lbs	A182-F316H

d3) FTHD-35/36

1. Type of Sensor			
FTHD-35	without end support		
FTHD-36	with end support		
2. Inside Diameter and Wall Thickness			
ID/WT	Inside diameter and wall thickness in mm (or inches), please specify		
3. Sensor Material			
S	316Ti (1.4571)		
4. Sensor Flange (identical to sensor material)			
SM	acc. DIN		
SA	acc. ANSI		
5. Sensor Flange Surface			
1	acc. DIN		
2	acc. ANSI RF		
3	acc. ANSI RF SF (smooth finish		
4	RTJ		
6. Sensor Flange Pressure Rating (PN / lbs), Material and Size (DN / inches)			
	Pressure rating	**Material**	**Size**
B01	PN 16 / 150 lbs	316Ti (1.4571)	DN 50 / 2”
B02	PN 40 / 300 lbs	316Ti (1.4571)	DN 50 / 2”
7. Mounting Stud (material of stud has to be identical / resp. weldable to the pipe material)			
0	without		
R	mounting stud with flange (standard)		
W	weldolet-stud with flange		
8. Mounting Stud Flange (size and pressure rating has to be identical to sensor flange)			
0	without		
M	acc. DIN, flange face form C		
A	acc. ANSI, flange face RF		
F	acc. ANSI, flange face SF (smooth finish)		
T	acc. ANSI, flange face RTJ		
9. Mounting Stud Flange, Material, Pressure Rating (PN / lbs) and Size (DN / inches)			
	Material	**Pressure rating**	**Size**
0	without		
C1	C.S.	PN 16 / 150 lbs	DN 50 / 2”
S1	316Ti	PN 16 / 150 lbs	DN 50 / 2”
C2	C.S.	PN 40 / 300 lbs	DN 50 / 2”
S2	316Ti	PN 40 / 300 lbs	DN 50 / 2”
10. End support (only FTHD-36)			
0	without		
C	C.S.		
S	316Ti (1.4571)		
11. Isolation Valve for Sensor Profile			
	See page no. 211		
12. Flanged Packing Gland			
S	316Ti (1.4571)		
13. Cage Nipple Material			
PC	C.S.		
PS	316Ti (1.4571)		
14. Packing Material			
1	PTFE, up to 392 °F (200 °C)		
2	Graphite up to 752 °F (400 °C)		
15. Gear Box			
0	without gear box		
1	with gear box, mat. die-cast aluminium		
2	with gear box, mat. stainless steel		

Continued next page

Code	Description
16. Thermal Insulation	
KI	without
X..	with thermal insulation, please advise thickness in mm (or inches)
17. Condensate Vessel	
	See page no. 214
18. Piping Run at Place of Installation	
HL	horizontal
VL	vertical
19. Integrated PT-100 RTD	
T0	without
TA	3-wire
TB	3-wire, with Ex-approval
20. Head Transmitter for RTD	
	See page no. 45
21. Shut-off-Device	
	See page no. 214

Order key for FTHD-35/36

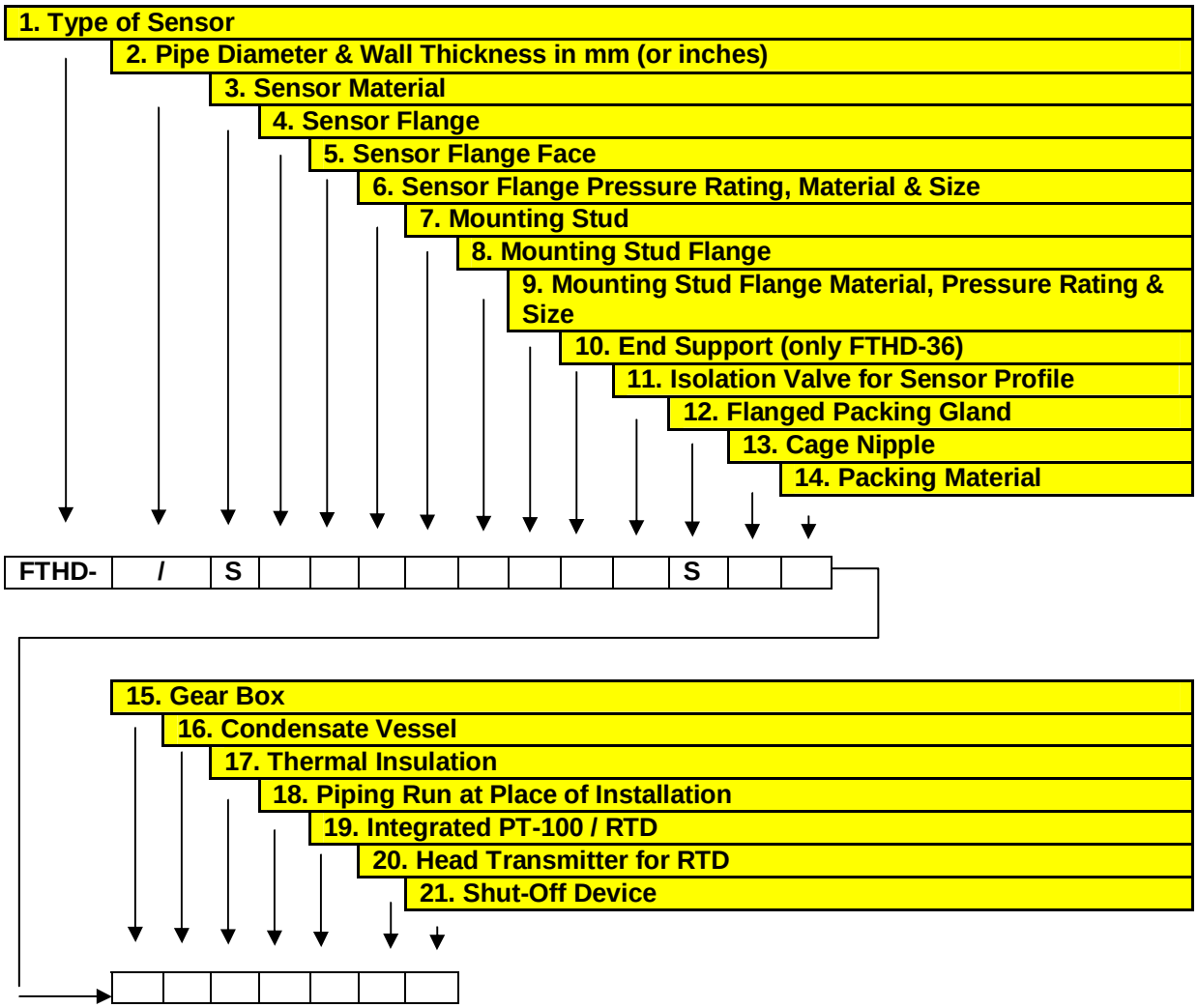

d3.1) Isolation Valve for the Sensor Profile, type FTHD-35/36

Code	Description		
Isolation Valve for Sensor Profile, acc. to DIN			
	Type	**Size / Pressure rating**	**Material**
MF30	ball valve	DN 50 / PN 16	C.S
MF31	ball valve	DN 50 / PN 16	A182-F316H
MF35	ball valve	DN 50 / PN 40	C.S
MF36	ball valve	DN 50 / PN 40	A182-F316H
MF40	ball valve	DN 50 / PN 63	C.S
MF41	ball valve	DN 50 / PN 63	A182-F316H
MS20	gate valve	DN 50 / PN 100	C.S
MS21	gate valve	DN 50 / PN 100	A182-F316H

Code	Description		
Isolation Valve for Sensor Profile, acc. to DIN			
	Type	**Size / Pressure rating**	**Material**
AF30	ball valve	2” 150 lbs	C.S
AF31	ball valve	2” 150 lbs	A182-F316H
AF35	ball valve	2” 300 lbs	C.S
AF36	ball valve	2” 300 lbs	A182-F316H
AS20	gate valve	2” 600 lbs	C.S
AS21	gate valve	2” 600 lbs	A182-F316H

e) Order Specification for Condensate Vessels, Instrument Connection and Shut-Off-Valves for Itabar-Flow-Sensors type FTMD

Flanged Joint at Sensor Head (1 pair)		
K0	without condensate vessels	
K1	condensate vessel, weld sockets 21,3 mm, edge form 21 acc. DIN 2559	
K3	condensate vessel with R ½" screw neck for screwed flange acc. DIN 19207	
K4	condensate vessel with ½"NPT screw neck	
K5	condensate vessel with Ermeto-coupling for 12 mm pipe (DIN 2353)	
Material and Size for Condensate Vessels		
	Material	**Size**
H	A 285 (P 265 GH) "heavy boiler plate HII"	∅ 88,9 x 5 mm
S	316Ti (1.4571)	∅ 88,9 x 5 mm

Shut-off-Device for Impulse Pipe, standard with welded condensate vessel (1 pair)				
	Type	**Nominal Pressure**	**Connection**	**Material**
A00	without shut-off-device			
A81	ANSI gate valve	800 lbs	½" NPT	Housing: A105 (C22) Packing graphite-fiber-glass
A82	ANSI gate valve	800 lbs	½" NPT	Housing: 316L (1.4404) Packing graphite-fiber-glass

Only for compact version:

Flanged Joint at Sensor Head (1 pair)		
A1	condensate vessel with sensor head, impulse pipe and mounting flange directly welded	
Material and Size of Condensate Vessel		
	Material	**Size**
H	A 285 (P 265 GH) "heavy boiler plate HII"	∅ 88,9 x 5 mm
S	316Ti (1.4571)	∅ 88,9 x 5 mm

Connection (only in combination with A1)	
A06	flange plate for 3-way-manifold, material: 316Ti (1.4571)
A15	flange plate for 5-way-manifold, material: 316Ti (1.4571)

Shut-off-Device for Impulse Pipe (only in combination with A1				
	Type	**Nominal Pressure**	**Material**	**Packing**
A00	without shut-off-device			
A66	3-way manifold	PN 400	A182-F316L (1.4401)	Graphite
A71	5-way-manifold	PN 400	A182-F316L (1.4401)	Graphite

D Appendices

D.1 Selected Application Examples

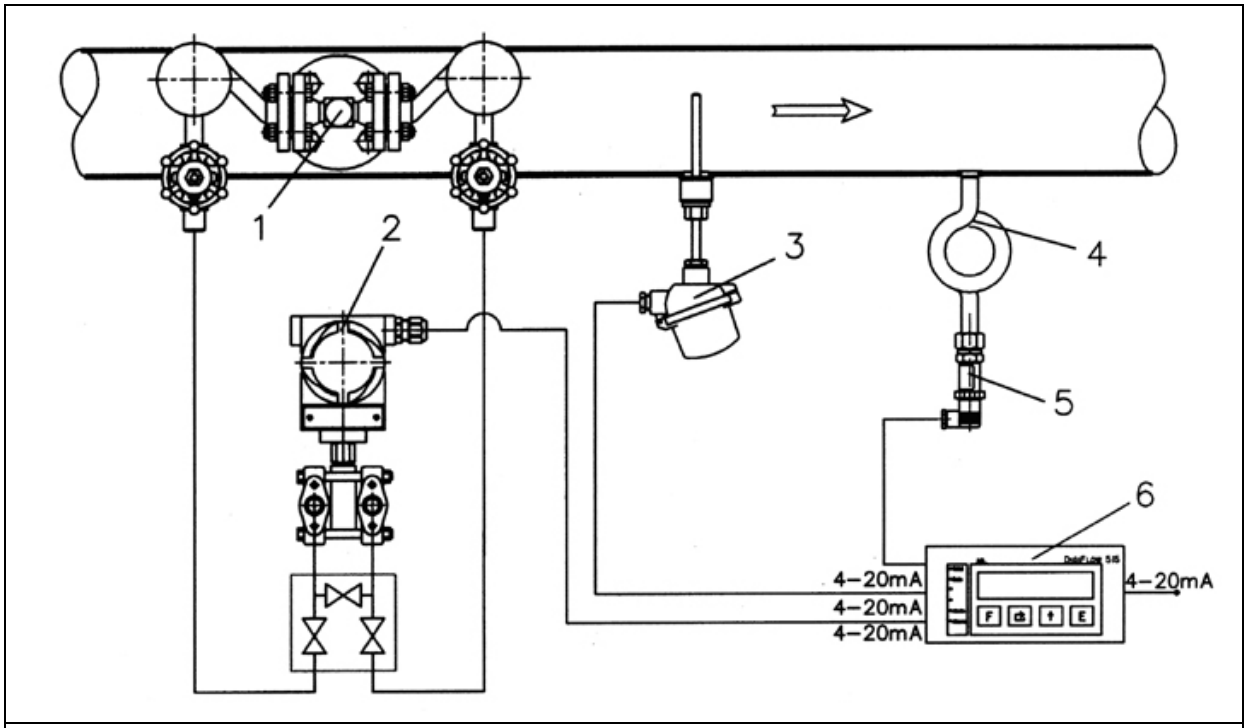

Fig. 67: Mass flow and heat measurement of steam with DP sensor type IBRD-26 (1), DP transmitter (2), PT100 temperature sensor (3) with integrated signal converter, contained (4) protected pressure sensor (5) and flow computer (6) type DigiFlow 515.

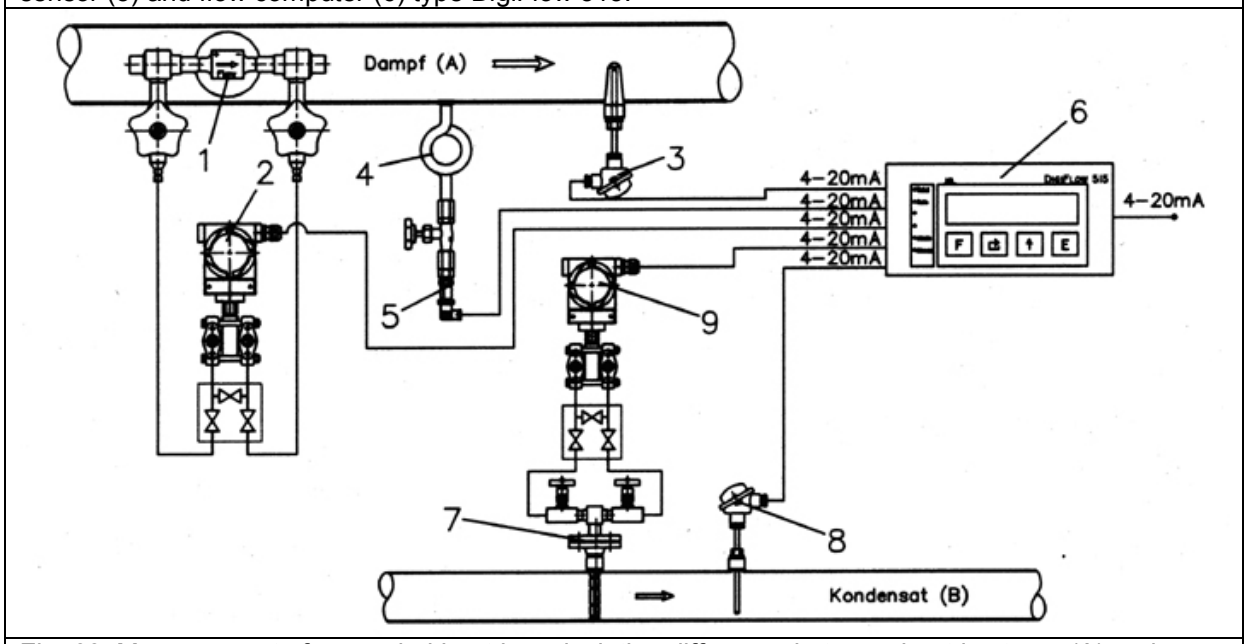

Fig. 68: Measurement of expended heat by calculating difference between heat in steam (A) and condensate (B). Components : DP sensor type IBFD-26 (1), DP transmitter (2 and 9), PT100 temperature sensor (3 and 8) with integrated signal converter, water loop (4), pressure sensor (5), DP sensor type IBF-25 (7) and flow computer (6) type DigiFlow 515.

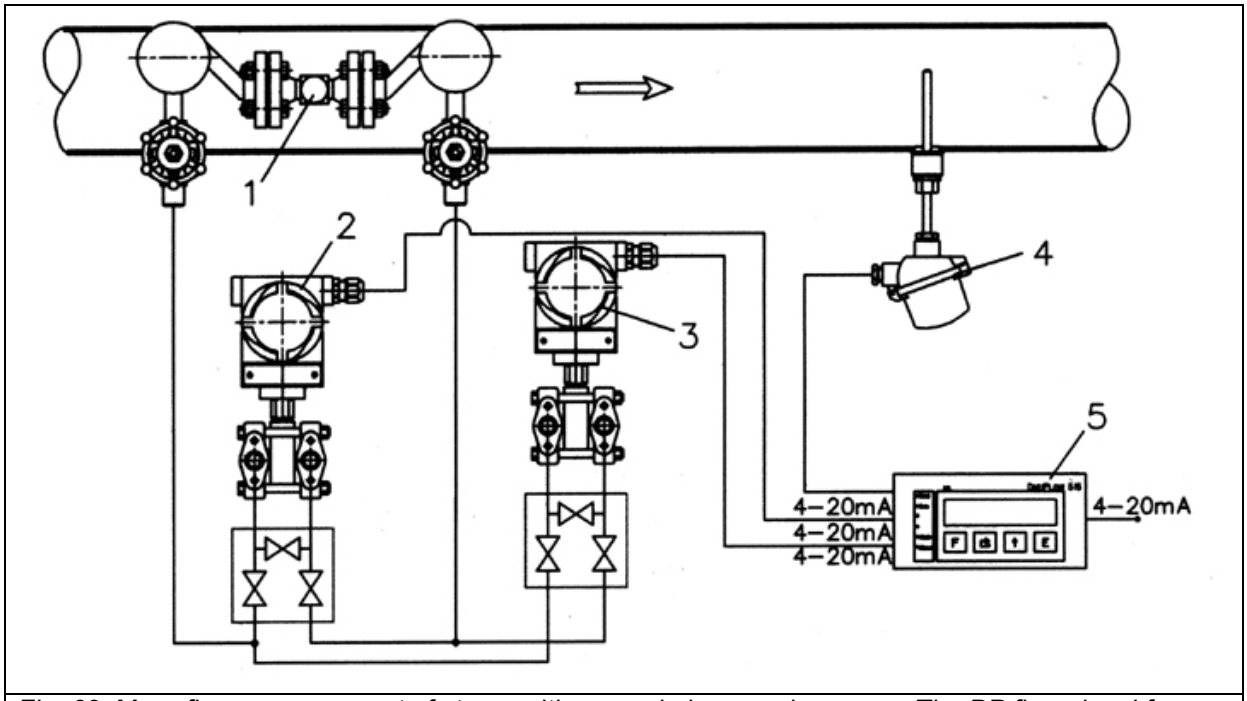

Fig. 69: Mass flow measurement of steam with expanded measuring range. The DP flow signal from sensor IBRD-26 (1) is the input to two separate DP transmitters (2 and 3) with different range settings (spilt range). Other components : PT100 temperature sensor (4) with integrated signal converter and flow computer type DigiFlow 515 (5).

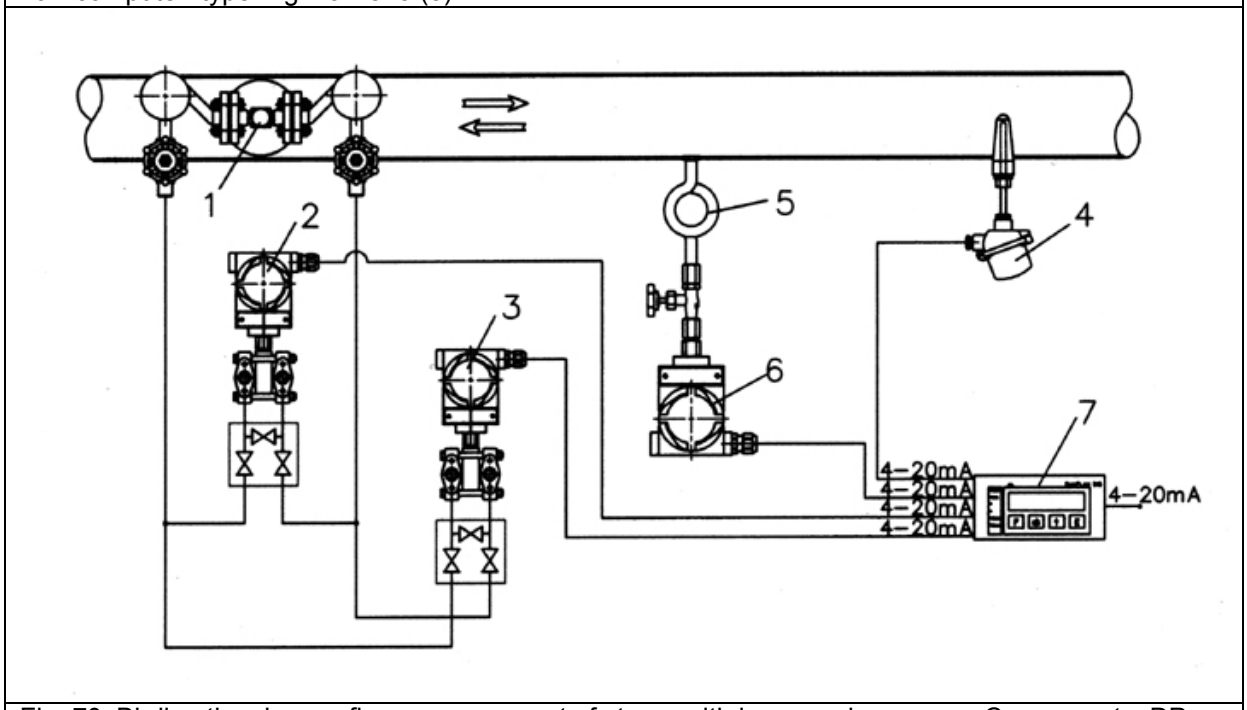

Fig. 70: Bi-directional mass flow measurement of steam with increased accuracy. Components: DP flow sensor type IBRD-25 (1), DP transmitter for forward flow (2) and reverse flow (3), PT100 temperature sensor with integrated signal converter (4), water loop (5), pressure sensor (6) and flow calculator (7) type DigiFlow 515.

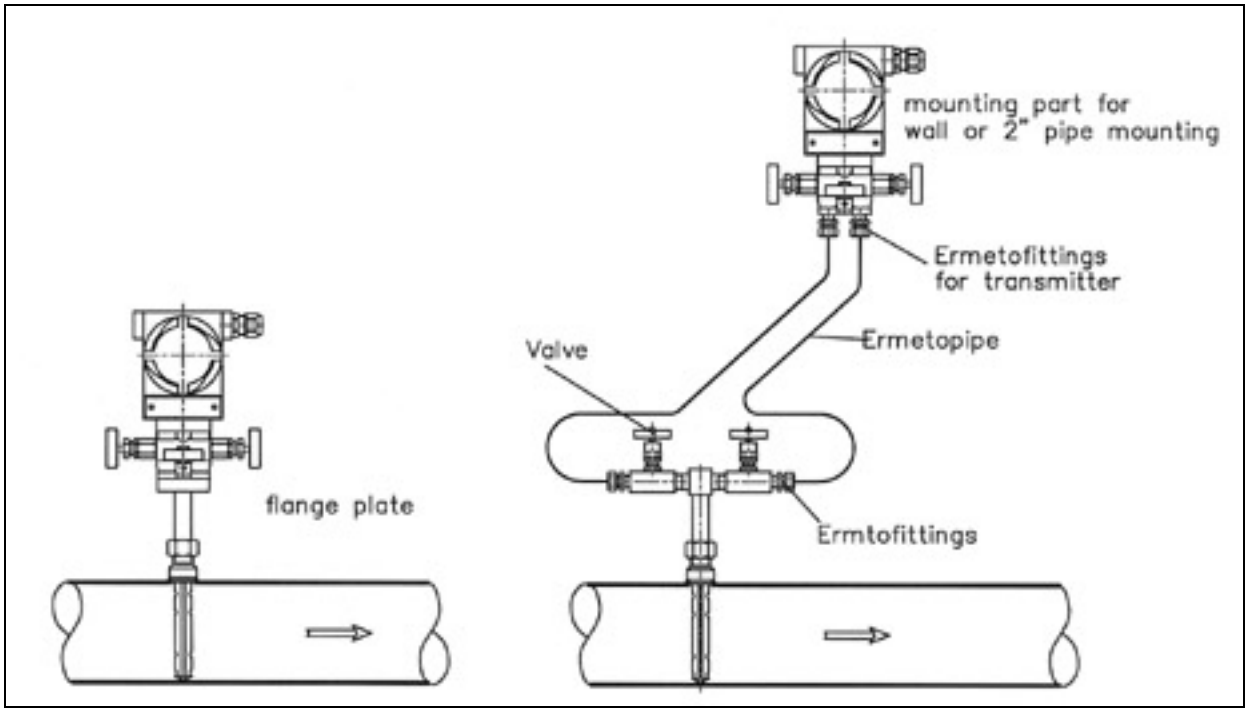

Fig 71: The temperature limits of compact sensors (w/integrally mounted DP transmitter) are given by the temperature limits T_{FL} of the transmitter's process connections (as listed by the manufacturer). It is necessary to calculate in each instance whether or not the maximum allowable temperature at the transmitter's process connection might be exceeded or not. Such calculations are a function of a number of variables, requiring case by case computations for reliable results.
If the operating temperature of the fluid far exceeds the specified transmitter temperature limits it is recommended to install heat or cold insulation layers or – as a further step – to increase the distance between transmitter flange plate and sensor pipe mounting.
The following example for the use of a compact version sensor (w/integral transmitter) illustrates the issue (see Fig 66): The differential pressure is measured by a standard DP transmitter with a maximum allowed temperature of T_{FL} = 85 °C at the process flanges.

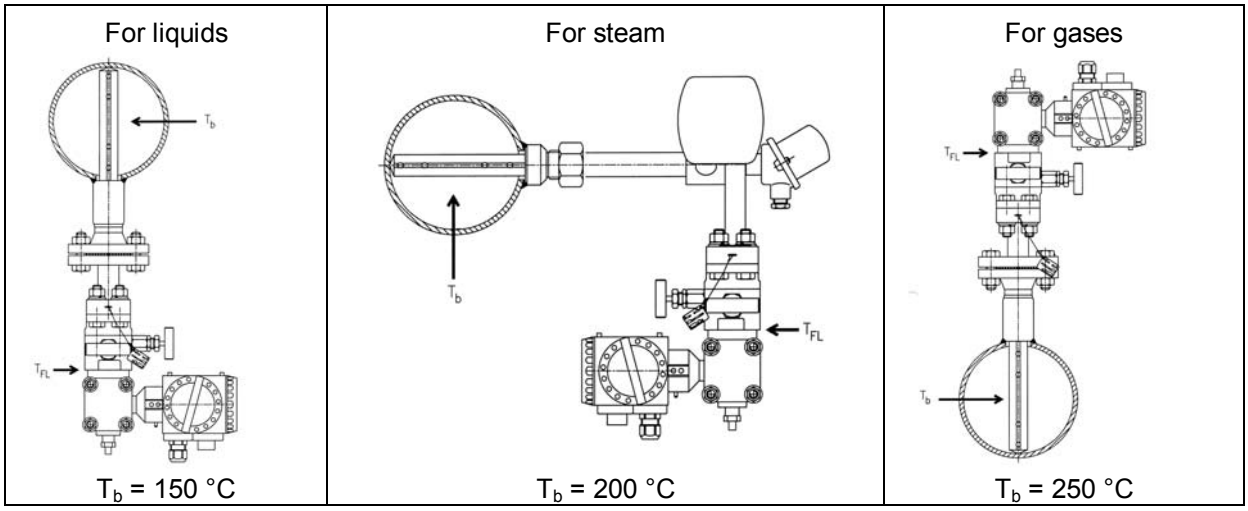

Fig 72: Maximum allowable operating temperature T_b and recommended installation for compact version DP flow sensors: For liquids (steam, gases) the maximum allowable temperature T_b = 150 °C (200 °C, 250°C). Experience shows that with these temperature limits the specified max temperature of T_{FL} = 85 °C at the process flanges will not be exceeded.

D.2 Comparison Table Pressure ratings acc. DIN and ANSI

DIN	ANSI	@ 20 °C
PN 16		max. 16 bar
	150 lbs	max. 20 bar
PN 40		max. 40 bar
	300 lbs	max. 50 bar
PN 64		max. 64 bar
PN 100		max. 100 bar
	600 lbs	max. 110 bar
	900 lbs	max. 150 bar
PN 160		max. 160 bar
PN 250		max. 250 bar
	1500 lbs	max. 260 bar
PN 320		max. 320 bar
PN 400		max. 400 bar
	2500 lbs	max. 420 bar

D.3 Engineering Units Conversion Tables

D.3.1 Pressure Units

In commerce and governmental business the older pressure units - at, atü, ata, kg/cm^2 , kp/cm^2 , atm, mmWS, kp/m^2, Torr, mmHG, mmQS - are only allowed for exports. The new pressure unit is PASCAL [Pa] = Newton per sqare meter [N/m^2]. Because this unit is not very handy „Bar“ is used as a multiple.

Pa N / m²	kPa	MPa	bar	mbar	inch H_2O	inch HG	PSI lpf/in²
1	10^{-3}	10^{-6}	10^{-5}	10^{-2}	$4{,}016 \cdot 10^{-3}$	$2{,}953 \cdot 10^{-4}$	$145{,}05 \cdot 10^{-6}$
10^{3}	1	10^{-3}	10^{-2}	10	4,016	0,2953	0,14505
10^{6}	10^{3}	1	10	10^{4}	4016	295,3	145,05
10^{5}	100	0,1	1	10^{3}	401,6	29,53	14,505
100	0,1	10^{-4}	10^{-3}	1	0,4016	$29{,}53 \cdot 10^{-3}$	$14{,}505 \cdot 10^{-3}$
249,1	0,2491	$0{,}2491 \cdot 10^{-3}$	$2{,}491 \cdot 10^{-3}$	2,491	1	$7{,}355 \cdot 10^{-2}$	$36{,}126 \cdot 10^{-3}$
3386	3,386	$3{,}386 \cdot 10^{-3}$	$3{,}386 \cdot 10^{-2}$	33,86	13,6	1	0,4912
6894,8	6,8948	$6{,}8948 \cdot 10^{-3}$	$6{,}8948 \cdot 10^{-2}$	68,948	27,68	2,036	1

Pressure conversion tables for older units :

Pa N / m²	kPa	bar	mbar	mmWS mmH_2O	Torr mmHg	at kp / cm²	atm
1	10^{-3}	10^{-5}	10^{-2}	0,102	$7{,}501 \cdot 10^{-3}$	$10{,}2 \cdot 10^{-6}$	$9{,}869 \cdot 10^{-6}$
10^{3}	1	10^{-2}	10	102	7,501	$10{,}2 \cdot 10^{-3}$	$9{,}869 \cdot 10^{-3}$
10^{6}	10^{3}	10	10^{4}	$102 \cdot 10^{3}$	7501	10,2	9,869
10^{5}	100	1	10^{3}	$10{,}2 \cdot 10^{3}$	750,1	1,02	0,9869
100	0,1	10^{-3}	1	10,2	0,7501	$1{,}02 \cdot 10^{-3}$	$0{,}9869 \cdot 10^{-3}$
9807	9,807	$98{,}07 \cdot 10^{-3}$	98,07	10^{3}	73,56	0,1	$96{,}78 \cdot 10^{-3}$
9,807	$9{,}807 \cdot 10^{-3}$	$98{,}07 \cdot 10^{-6}$	$98{,}07 \cdot 10^{-3}$	1	$73{,}56 \cdot 10^{-3}$	10^{-4}	$96{,}78 \cdot 10^{-6}$
133,32	0,13332	$1{,}333 \cdot 10^{-3}$	1,333	13,59	1	$1{,}359 \cdot 10^{-3}$	$1{,}316 \cdot 10^{-3}$
$98{,}07 \cdot 10^{3}$	98,07	0,9807	980,7	10^{4}	735,6	1	0,9678
$1{,}013 \cdot 10^{5}$	101,3	1,013	1013	$10{,}33 \cdot 10^{3}$	760	1,033	1

D.3.2 Viscosity Units

There are two types of viscosity : dynamic viscosity and kinematic viscosity .

Dynamic viscosity is independent of fluid density. The SI unit for dynamic viscosity is the Pascal-second [Pa°s]. A dynamic viscosity of one Pascal-second is equal to the dynamic viscosity of a laminar flowing homogenous fluid, in which the tension between two in parallel flowing streams with an in-between distance of 1 meter and at a velocity difference of 1 m/s is 1 Pascal. Older units for dynamic viscosity are Poise [P] or [kp s/m^2].

Conversion Table for Dynamic Viscosity Units

Pa s	mPa s cP	dPa s P	kp s / m^2	kp h / m^2	lb-mass/ ft s	lb-force s/ ft^2
1	1000	10	0,10197	2,833 x 10^{-5}	0,6721	2,0885 x 10^{-2}
0,001	1	0,01	0,10197 x 10^{-3}	2,833 x 10^{-8}	0,6721 x 10^{-3}	2,0885 x 10^{-5}
0,1	100	1	0,010197	2,833 x 10^{-6}	0,06721	2,0885 x 10^{-3}
9,807	9807	98,07	1	2,778 x 10^{-4}	6,5919	0,20482
0,35304 x 10^5	0,35304 x 10^8	0,35304 x 10^6	3600	1	2,3730 x 10^4	0,73728 x 10^3
1,488	1448,2	14,882	0,1518	4,214 x 10^{-5}	1	0,03108
47,88	47880	478,8	4,882	1,3558 x 10^{-3}	32,174	1

Kinematic Viscosity is density dependent and therefore always related to the density of a fluid. The unit of measure is square meter per second [m^2/s]. A kinematic viscosity of one m^2/s is equal to the kinematic viscosity of a homogenous fluid with a dynamic viscosity of one Pascal-second and a density of 1 kg/cubic meter. The unit Stokes (St) is no longer valid.

The Engler-Degree [E] is not a unit in the meaning of the „laws of mass unit measurements“. To convert Engler-Degree into kinematic viscosity v the following equation can be used:

$$\nu = (7{,}32\ E - \frac{6{,}31}{E})\ 10^{-6}\ m^2\ /\ s$$ (equation 14.1)

Conversion Table for Kinematic Viscosity Units

m^2/s	cm^2/s	mm^2/s	m^2/h	St	cSt	ft^2/s	ft^2/h
1	10^5	10^6	3600	10^5	10^6	10,764	3,875 x 10^4
10^{-4}	1	100	0,36	1	100	1,0764 x 10^{-3}	3,875
10^{-6}	10^{-2}	1	0,0036	0,01	1	1,0764 x 10^{-5}	0,03875
2,778 x 10^{-4}	2,778	277,8	1	2,778	277,8	29,9 x 10^{-4}	10,764
10^{-4}	1	100	0,36	1	100	1,0764 x 10^{-3}	3,875
10^{-6}	10^{-2}	1	0,0036	0,01	1	1,0764 x 10^{-5}	0,03875
9,2903 x 10^{-2}	929,03	92903	334,45	929,03	92903	1	3600
0,25806 x 10^{-4}	0,25806	25,806	9,2903 x 10^{-2}	0,25806	24,806	2,778 x 10^{-4}	1

Besides the products covered by this brochure, Intra-Automation GmbH also manufactures other high-quality and high precision instruments for industrial measurement tasks. For more information, please contact us (contact details on the backside of this brochure).

Flow measurement

Itabar®-Flow Sensor

IntraSonic IS210 Ultrasonic Flow Meter

Level measurement

ITA-mag. Level Gauge

MAGLINK Level Indicator

Other Measurement Tasks:

DigiFlow Flow and Level Computers

IntraCon Digital Controllers

IntraDigit Digital Indicators / Meters

INTRA-AUTOMATION

MESS- UND REGELINSTRUMENTE / MEASUREMENT AND CONTROL

TÜVRheinland® CERT ISO 9001

International Headquarters:
Intra-Automation GmbH
Otto-Hahn-Str. 20
41515 Grevenbroich
GERMANY

☎ +49 – (0) 21 81 / 7 56 65-0
🖷 +49 – (0) 21 81 / 6 44 92

info@intra-automation.de

Sales Office for the BENELUX:
B.V. Intra-Automation HTP
PO Box 10
4731 AA Oudenbosch
THE NETHERLANDS

☎ +31 – (0)165 – 32 22 01
🖷 +31 – (0)165 – 32 29 70

info@intra-automation.nl

www.intra-automation.com